YAMAHA

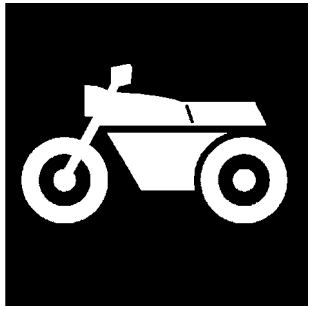

PARTS CATALOGUE

YZF-R15 (2FB9) INDIA

YAMAHA GENUINE Parts & Accessories

1S2FB-470EA

( )

YZF-R15
PARTS CATALOGUE
©2016 by Yamaha Motor Co., Ltd.
1st edition, August 2016
All rights reserved.
Any reprinting or unauthorized use
without the written permission of
Yamaha Motor Co., Ltd.
is expressly prohibited.
Printed in Japan.

FOREWORD

This Parts Catalogue is related to the parts for the model(s) on the cover page. When you are ordering replacement parts, please refer to this Parts Catalogue and quote both part numbers and part names correctly.

1. Modifications or additions which have been made after the issue of the Parts Catalogue will be announced in the Parts News.
   It is advisable that you make the necessary corrections to the Parts Catalogue according to the Parts News.

2. Abbreviations
   The following abbreviations are used in this Parts Catalogue.

   "UR" Use specified parts number.

   "UN" Use as many as needed.

   "AP" Alternate Parts

   "LM" Locally Made (Parts need to be ordered locally)

   "F#" Frame No. (Applicable machine No.)

   "O/S" Over Size

3. The number of components for assembly
   - Parts, which are to be supplied in an assembly, are listed with a dot (.) in front of the part name as shown below.
   - The numeral appearing to the right of each component part indicates the quantity of parts for each assembly unit.

PART NO.	DESCRIPTION	Q'TY	REMARKS
2F5–83310–60	FRONT FLASHER LIGHT ASSY	2	
115–83311–60	.BULB (6V–18W)	1	

4. Applicable colours of graphics are represented in the "REMARKS" as shown below.

PART NO.	DESCRIPTION	Q'TY	REMARKS
2N4–24110–00–X5	FUEL TANK COMP.	2	MXR
3J1–24240–10	.GRAPHIC, FUEL TANK	1	FOR MXR

5. Note that the illustrations for reference in finding parts numbers are not to be used for assembling. When assembling, please use the applicable service manual.

6. The asterisk (*) before a reference number indicates modified items after the first edition.

7. Applicable Serial No.

Frame Serial No.

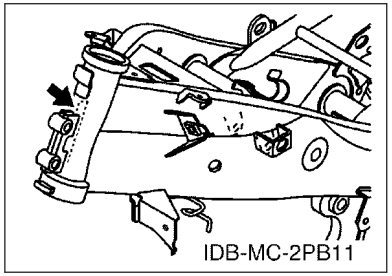

Engine Serial No.

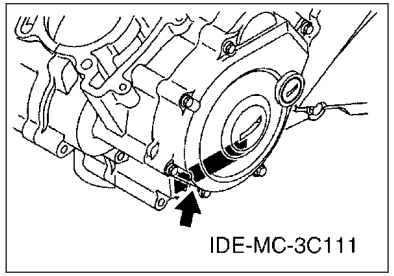

8. Applicable Colour Code (The (*) mark shows Model colour.)

Abbreviation	Colour Name	Colour Code
BWC1(*)	BLUISH WHITE COCKTAIL 1	0390
MNM3	MAT GRAY METALLIC 3	1278
YB	YAMAHA BLACK	0033
YRC2(*)	YELLOWISH RED COCKTAIL 2	1161

9. Applicable Starting Serial No.

Frame Serial No.

Serial No.	Name Of Q'ty Column	Model Code

Engine Serial No.

Serial No.	Name Of Q'ty Column	Model Code

CONTENTS

ENGINE

CYLINDER....1
CRANKSHAFT & PISTON....2
VALVE....3
CAMSHAFT & CHAIN....4
WATER PUMP....5
RADIATOR & HOSE....6
OIL PUMP....7
INTAKE....8
EXHAUST....10
CRANKCASE....11
CRANKCASE COVER 1....12
STARTER CLUTCH....13
CLUTCH....14
TRANSMISSION....15
SHIFT CAM & FORK....16
SHIFT SHAFT....17

CHASSIS

FRAME....18
FENDER....19
SIDE COVER....20
REAR ARM & SUSPENSION....22
STEERING....24
FRONT FORK....25
FUEL TANK....27
SEAT....29
FRONT WHEEL....30
FRONT BRAKE CALIPER....31
REAR WHEEL....32
REAR BRAKE CALIPER....34
STEERING HANDLE & CABLE....35
FRONT MASTER CYLINDER....36
STAND & FOOTREST....37
REAR MASTER CYLINDER....39
LEG SHIELD....40
WINDSHIELD....41
GENERATOR....43
STARTING MOTOR....44
FLASHER LIGHT....45
METER....47
HEADLIGHT....48
TAILLIGHT....49
HANDLE SWITCH & LEVER....50
ELECTRICAL 1....51
ELECTRICAL 2....52

INDEX

NUMERICAL INDEX....54

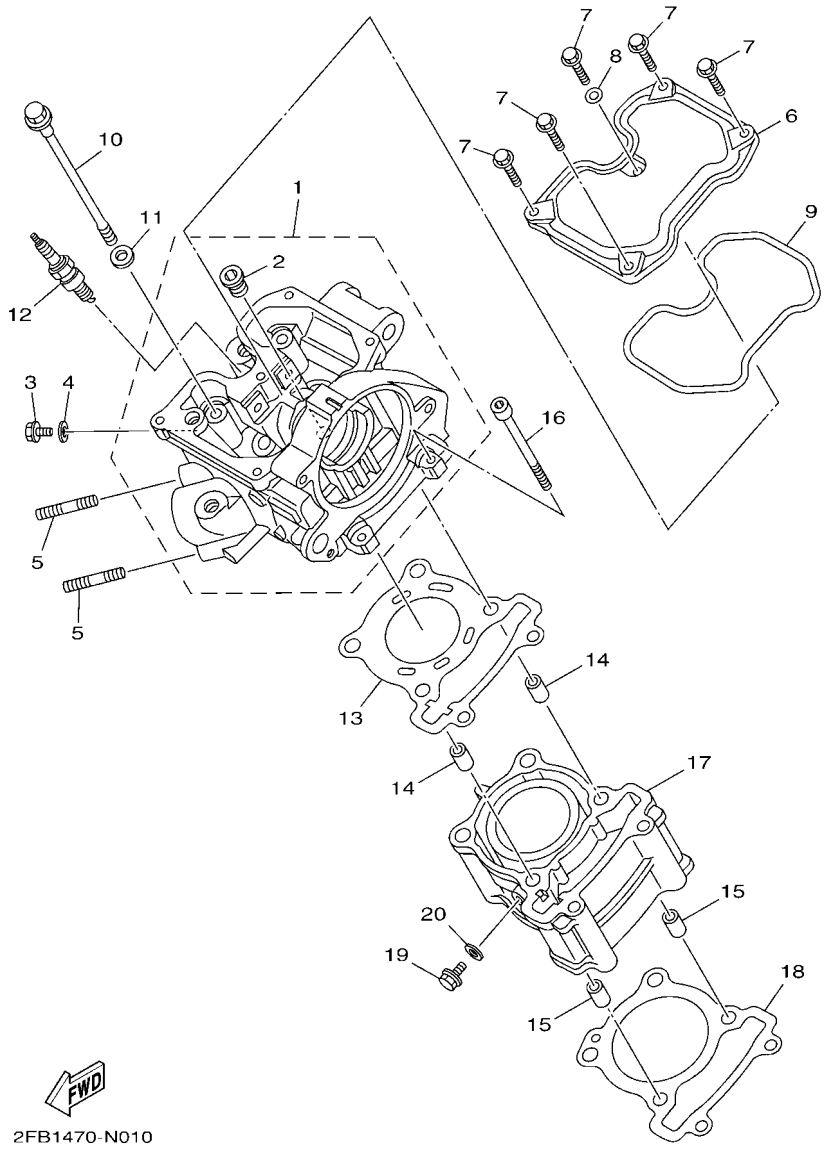

FIG. 1 CYLINDER

REF. NO.	PART NO.	DESCRIPTION	2FB9					REMARKS
1	2FB–E1102–00	CYLINDER HEAD ASSY	1					
2	90340–12813	.PLUG, STRAIGHT SCREW	1					
3	95022–06010	BOLT, FLANGE	1					
4	90430–06014	GASKET	1					
5	95612–08640	BOLT, STUD	2					
6	2FB–E1191–00	COVER, CYLINDER HEAD 1	1					
7	95022–06020	BOLT, FLANGE	5					
8	90430–06014	GASKET	1					
9	38B–E1193–00	GASKET, HEAD COVER 1	1					
10	90105–08850	BOLT, FLANGE	4					
11	90201–08609	WASHER, PLATE	4					
12	94703–00318	PLUG, SPARK (NGK R CR9E)	1					
13	1CK–E1181–00	GASKET, CYLINDER HEAD 1	1					
14	91810–14809	PIN, DOWEL	2					
15	91810–14809	PIN, DOWEL	2					
16	91312–06100	BOLT	2					
17	1PA–E1311–00	CYLINDER 1	1					
18	38B–E1351–00	GASKET, CYLINDER	1					
19	95022–06010	BOLT, FLANGE	1					
20	90430–06014	GASKET	1					

FIG. 2 CRANKSHAFT & PISTON

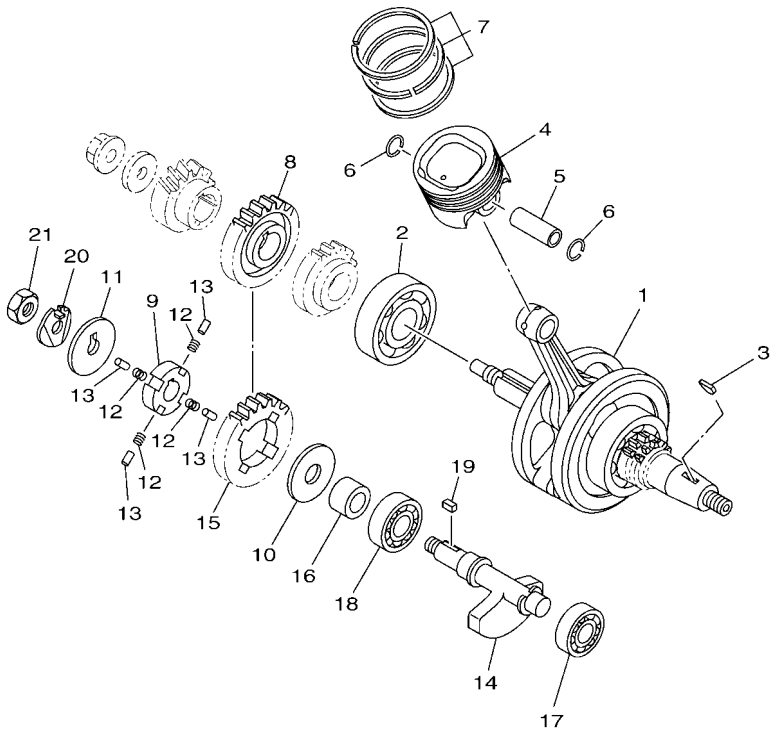

2FB1470-N020

REF. NO.	PART NO.	DESCRIPTION	2FB9					REMARKS
1	1CK–E1400–09	CRANKSHAFT ASSY	1					
2	93306–305X7	BEARING	1					
3	90280–03017	KEY, WOODRUFF	1					
4	3C1–E1631–11	PISTON (STD)	1					
5	38B–E1633–00	PIN, PISTON	1					
6	93450–16115	CIRCLIP	2					
7	1PA–E1603–00	PISTON RING SET (STD)	1					
8	38B–E1536–10	GEAR, DRIVE	1					
9	21C–E1496–20	BOSS, BUFFER	1					
10	90201–15022	WASHER, PLATE	1					
11	90214–10006	WASHER, CLAW	1					
12	54B–E1476–00	SPRING	4					
13	21C–E3362–00	ROLLER	4					
14	2FB–E1454–00	WEIGHT 1	1					
15	21C–E1531–01	GEAR, BALANCE WEIGHT	1					
16	90387–15810	COLLAR	1					
17	93306–202YD	BEARING	1					
18	93306–203XS	BEARING	1					
19	90282–05031	KEY, STRAIGHT	1					
20	90215–10284	WASHER, LOCK	1					
21	90170–10012	NUT	1					

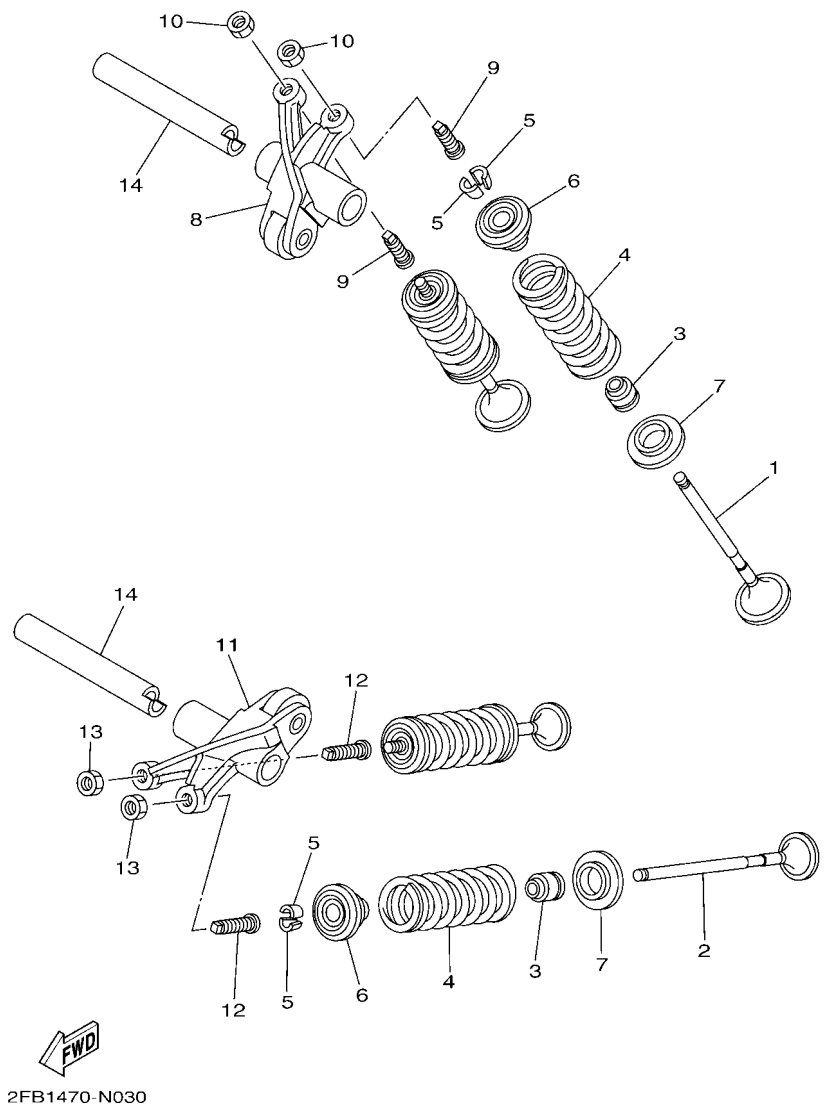

FIG. 3 VALVE

REF. NO.	PART NO.	DESCRIPTION	2FB9					REMARKS
1	5YP–E2111–00	VALVE, INTAKE	2					
2	5YP–E2121–00	VALVE, EXHAUST	2					
3	38B–E2119–00	SEAL, VALVE STEM	4					
4	38B–E2113–00	SPRING, VALVE INNER	4					
5	1WG–12118–00	LOCK, VALVE SPRING RETAINER	8					
6	1PA–E2117–00	RETAINER, VALVE SPRING	4					
7	38B–E2126–00	SEAT, VALVE SPRING 2	4					
8	38B–E2151–10	ARM, VALVE ROCKER	1					
9	2DM–12159–00	SCREW, VALVE ADJUSTING	2					
10	90170–05302	NUT	2					
11	38B–E2161–10	ARM, VALVE ROCKER 2	1					
12	2DM–12159–00	SCREW, VALVE ADJUSTING	2					
13	90170–05302	NUT	2					
14	1CK–E2156–00	SHAFT, ROCKER 2	2					

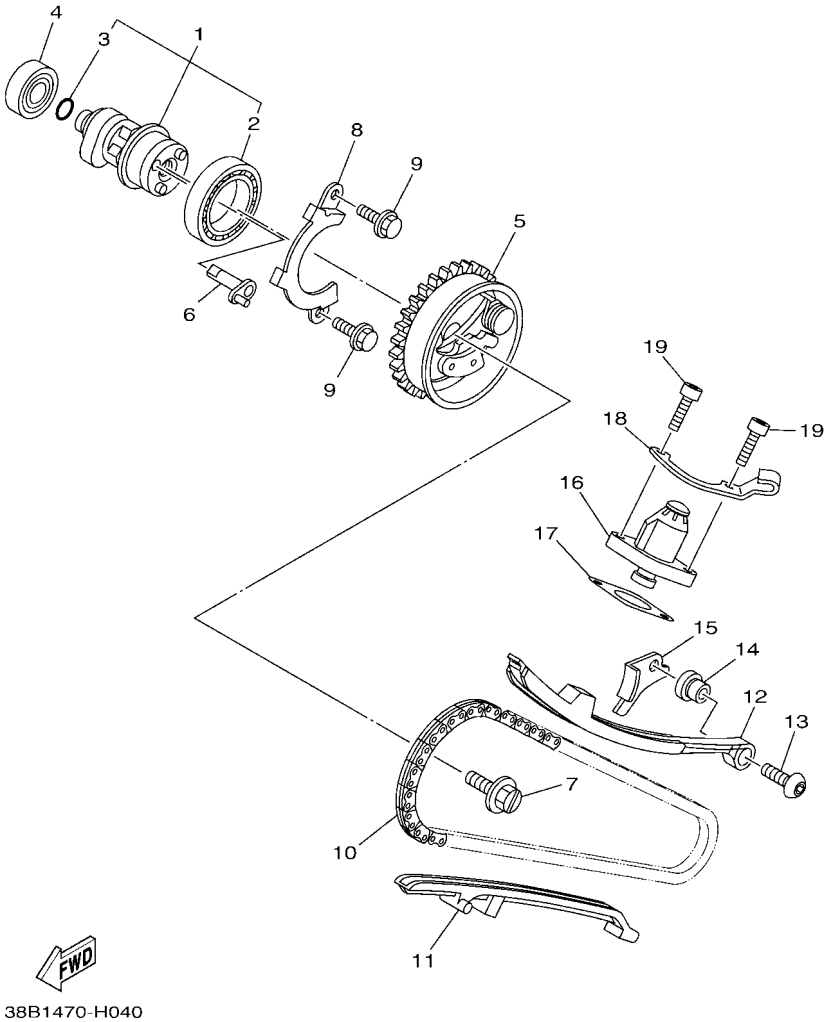

FIG. 4 CAMSHAFT & CHAIN

REF. NO.	PART NO.	DESCRIPTION	2FB9					REMARKS
1	38B–E2170–00	CAMSHAFT ASSY 1	1					
2	93306–906Y0	.BEARING	1					UR
	93306–906Y1	.BEARING	1					UR
3	93210–09809	.O-RING	1					
4	93306–001X7	BEARING	1					
5	2ND–E2280–00	DECOMPRESSION ASSY	1					
6	2FB–E2288–00	CAM, DECOMPRESSION	1					
7	2FB–E2157–00	BOLT	1					
8	38B–E111F–00	PLATE	1					
9	95022–06010	BOLT, FLANGE	2					
10	94568–A8096	CHAIN	1					
11	38B–E2231–00	GUIDE, STOPPER 1	1					
12	38B–E2241–00	GUIDE, STOPPER 2	1					
13	90149–06829	SCREW	1					
14	38B–E5598–00	COLLAR	1					
15	38B–E2256–00	COVER, CHAIN	1					
16	38B–E2210–00	TENSIONER ASSY, CAM CHAIN	1					
17	1CK–E2213–00	GASKET, TENSIONER CASE	1					
18	38B–E5441–00	HOLDER, CLUTCH CABLE	1					
19	91312–06020	BOLT	2					

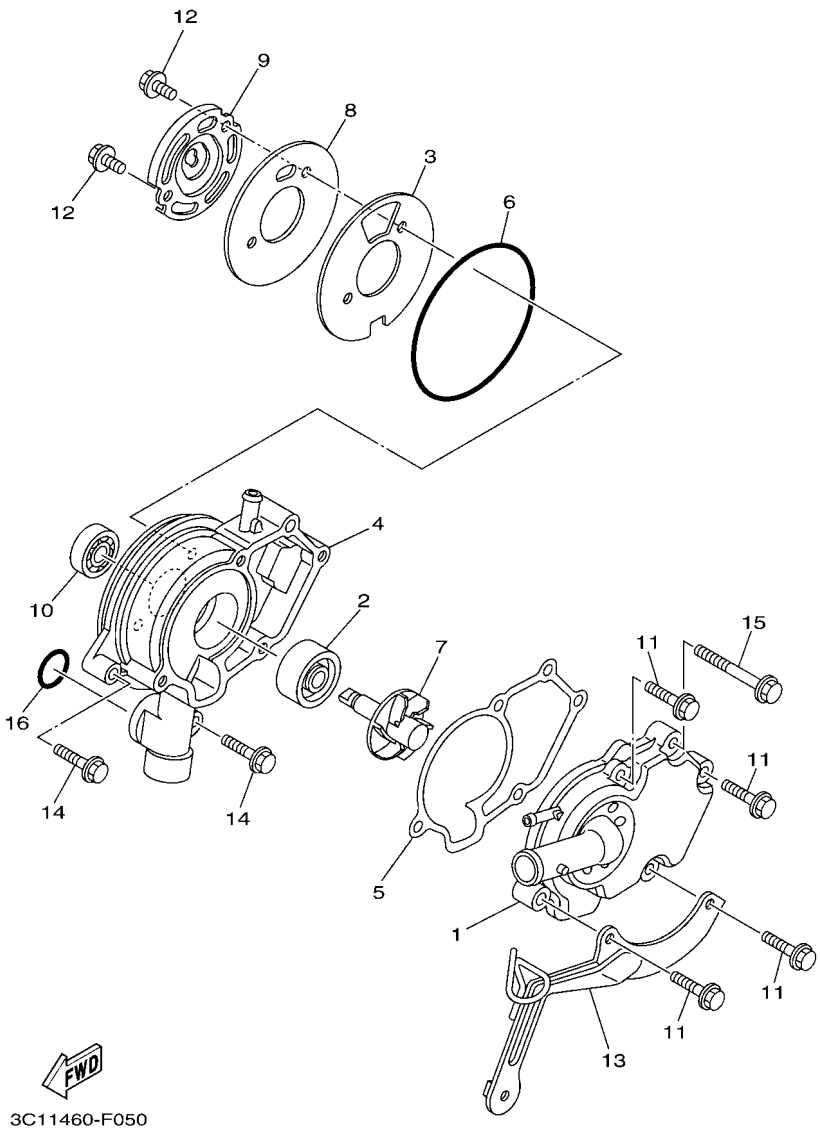

FIG. 5 WATER PUMP

REF. NO.	PART NO.	DESCRIPTION	2FB9					REMARKS
1	38B–E2422–00	COVER, HOUSING	1					
2	93103–10804	OIL SEAL	1					
3	38B–E2428–00	GASKET, HOUSING COVER 2	1					
4	38B–E1185–01	COVER, CYLINDER HEAD SIDE 3	1					
5	38B–E1196–00	GASKET, CYLINDER HEAD SIDE	1					
6	93210–84802	O-RING	1					
7	38B–E2450–01	IMPELLER SHAFT ASSY	1					
8	38B–E1951–00	PLATE	1					
9	38B–E1952–01	PLATE	1					
10	93306–000Y5	BEARING	1					
11	95022–06025	BOLT, FLANGE	4					
12	95022–06012	BOLT, FLANGE	2					
13	38B–E2443–00	STAY	1					
14	95022–06025	BOLT, FLANGE	2					
15	95022–06050	BOLT, FLANGE	1					
16	93210–19809	O-RING	1					

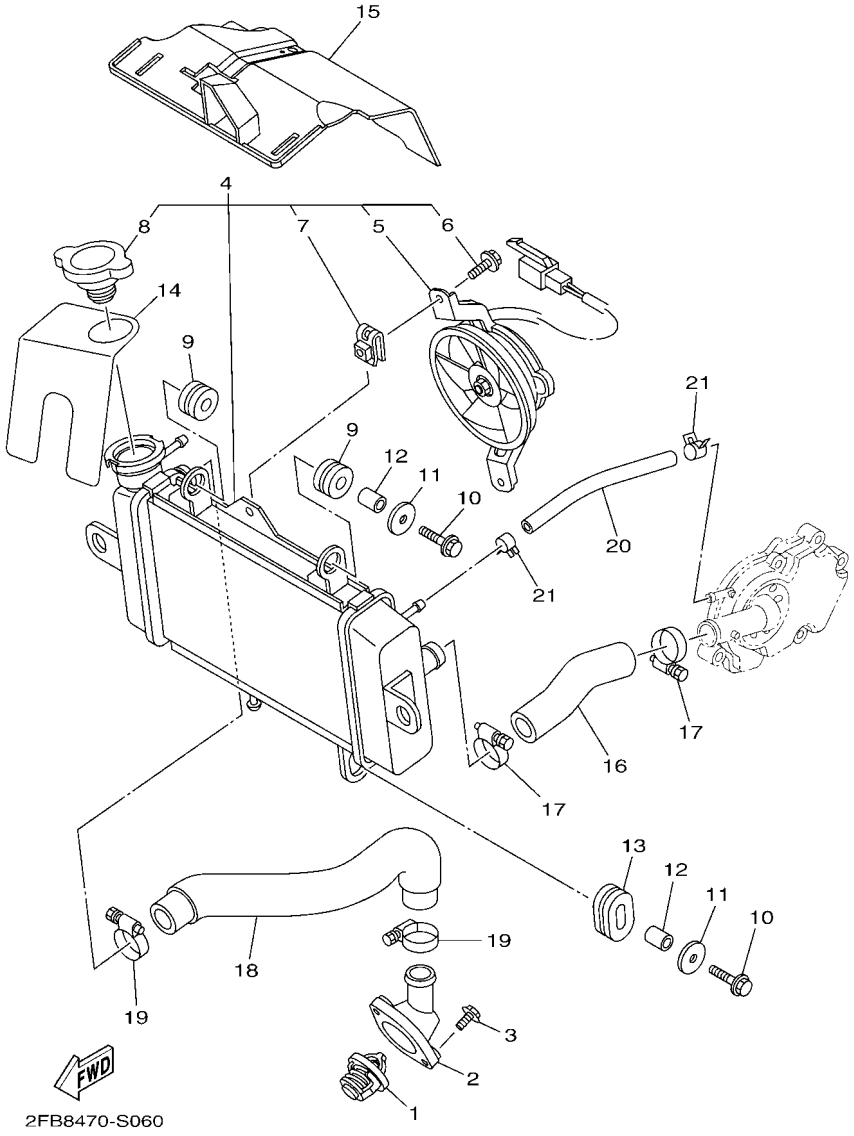

FIG. 6 RADIATOR & HOSE

REF. NO.	PART NO.	DESCRIPTION	2FB9					REMARKS
1	1CK–E2411–00	THERMOSTAT	1					
2	38B–E2413–00	COVER, THERMOSTAT	1					
3	95022–06020	BOLT, FLANGE	2					
4	BB7–E240A–01	RADIATOR ASSY	1					
5	BB7–E2405–01	.BLOWER ASSY	1					
6	BB7–E2675–00	.BOLT, BLOWER HOLDING	2					
7	BB7–E2671–00	.NUT 1	2					
8	BB7–E2462–00	.CAP, RADIATOR	1					
9	90480–15363	GROMMET	2					
10	95822–06025	BOLT, FLANGE	2					
11	90201–06072	WASHER, PLATE	2					
12	90387–064W3	COLLAR	2					
13	90480–01803	GROMMET	1					
14	1CK–E246A–00	COVER 1	1					
15	20P–E2467–01	COVER, RADIATOR	1					
16	20P–E2481–00	PIPE 1	1					
17	90450–27806	HOSE CLAMP ASSY	2					
18	20P–E2482–00	PIPE 2	1					
19	90450–27806	HOSE CLAMP ASSY	2					
20	90445–12804	HOSE	1					
21	90467–10808	CLIP	2					

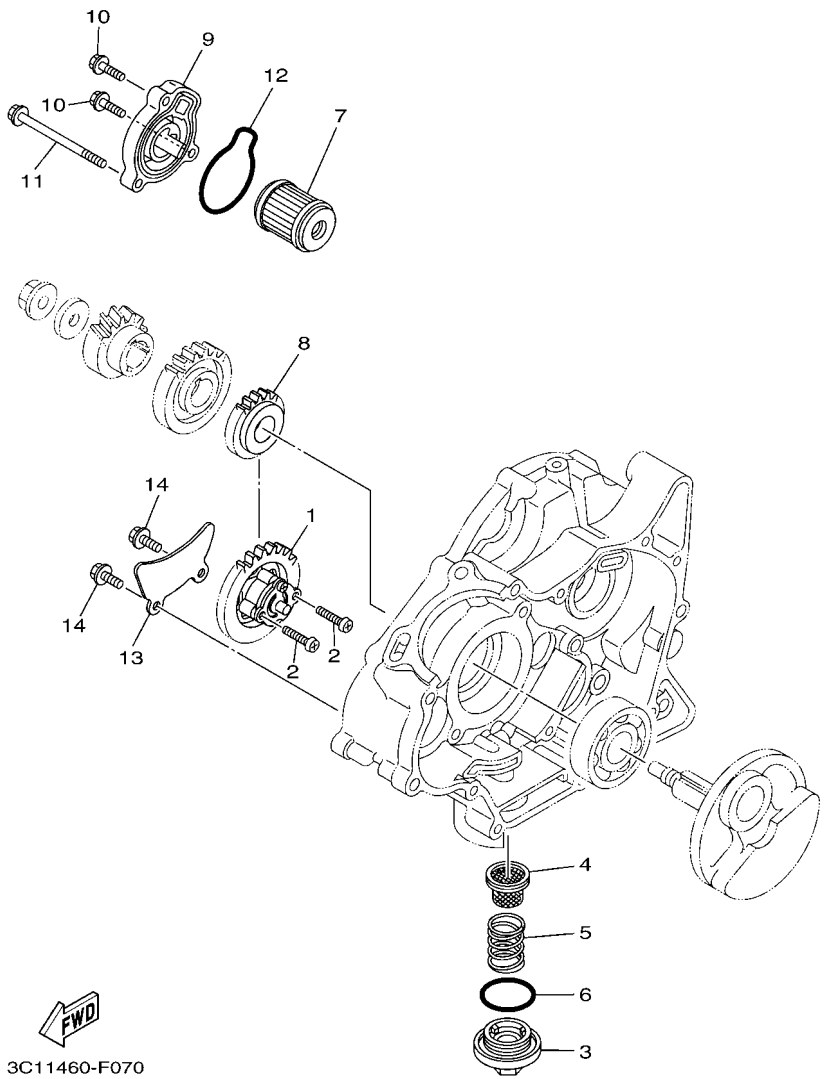

FIG. 7 OIL PUMP

REF. NO.	PART NO.	DESCRIPTION	2FB9					REMARKS
1	38B–E3300–01	OIL PUMP ASSY	1					
2	98502–05025	SCREW, PAN HEAD	2					
3	38B–E5351–00	PLUG, DRAIN	1					
4	38B–E3411–00	STRAINER, OIL	1					
5	90501–18576	SPRING, COMPRESSION	1					
6	93210–34805	O-RING	1					
7	38B–E3440–00	ELEMENT ASSY, OIL CLEANER	1					
8	38B–E3324–00	GEAR, PUMP DRIVE	1					
9	38B–E3447–00	COVER, OIL ELEMENT	1					
10	95022–06020	BOLT, FLANGE	2					
11	95022–06080	BOLT, FLANGE	1					
12	93210–54806	O-RING	1					
13	38B–E3327–00	COVER, PUMP GEAR	1					
14	95022–06012	BOLT, FLANGE	2					

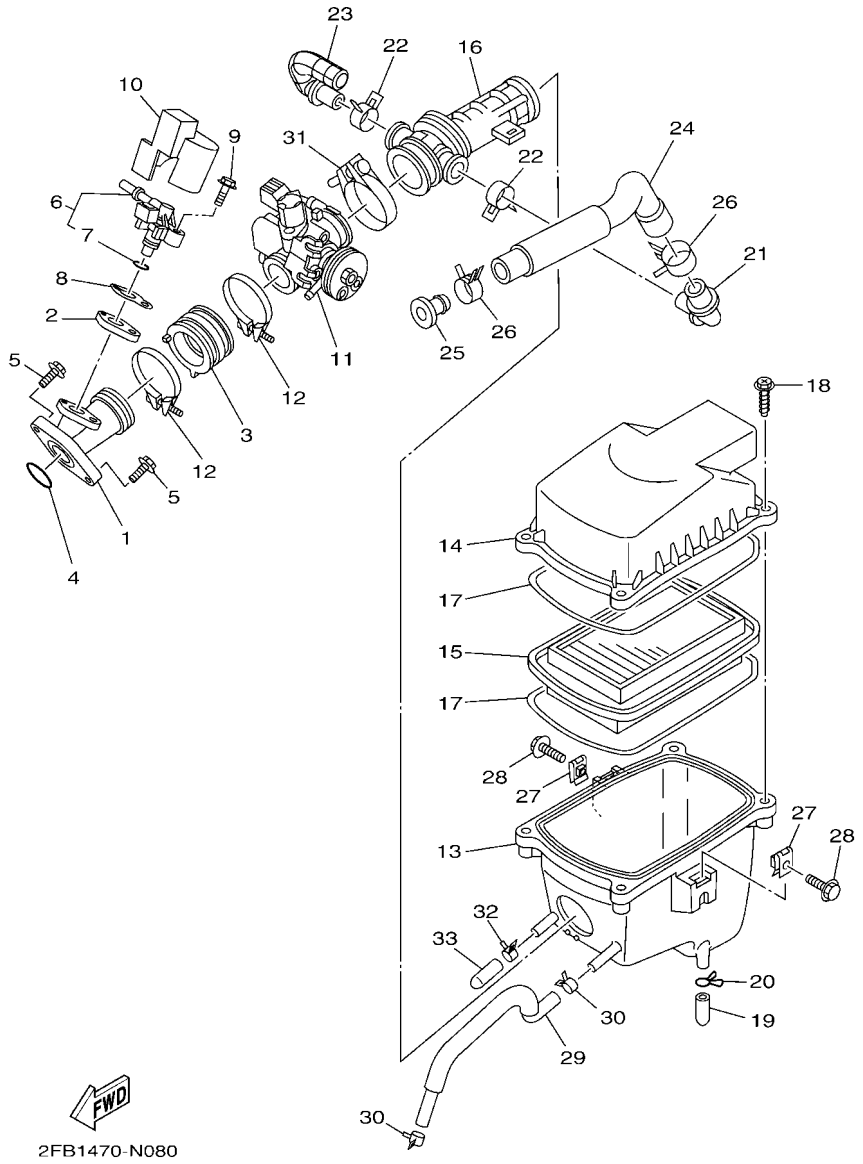

FIG. 8 INTAKE

REF. NO.	PART NO.	DESCRIPTION	2FB9					REMARKS
1	2FB–E3585–00	MANIFOLD	1					
2	2FB–E3556–00	GASKET, MANIFOLD	1					
3	2FB–E3635–00	JOINT, INTAKE 1	1					
4	93210–32807	O-RING	1					
5	95022–06020	BOLT, FLANGE	2					
6	5D7–E3770–00	INJECTOR ASSY	1					
7	5CA–E4147–00	.O-RING	1					
8	2FB–E3557–00	GASKET	1					
9	95812–06030	BOLT, FLANGE	1					
10	2FB–E3767–00	CAP, INJECTOR	1					
11	2FB–E3750–00	THROTTLE BODY ASSY	1					
12	90450–48805	HOSE CLAMP ASSY	2					
13	20P–E4411–00	CASE, AIR CLEANER 1	1					
14	20P–E4412–00	CAP, CLEANER CASE 1	1					
15	20P–E4450–00	ELEMENT ASSY, AIR CLEANER	1					
16	20P–E4453–01	JOINT, AIR CLEANER 1	1					
17	3C1–E4452–00	SEAL	2					
18	90163–05803	SCREW, TAPPING	4					
19	20P–E443E–00	PIPE, DRAIN	1					
20	90467–12800	CLIP	1					
21	20P–E4485–00	PIPE, JOINT	1					
22	90467–20050	CLIP	2					
23	20P–E4419–00	PIPE	1					
24	2FB–E441J–00	PIPE, SILENCER	1					
25	90338–16008	PLUG	1					
26	90467–23802	CLIP	2					
27	90183–06822	NUT, SPRING	2					

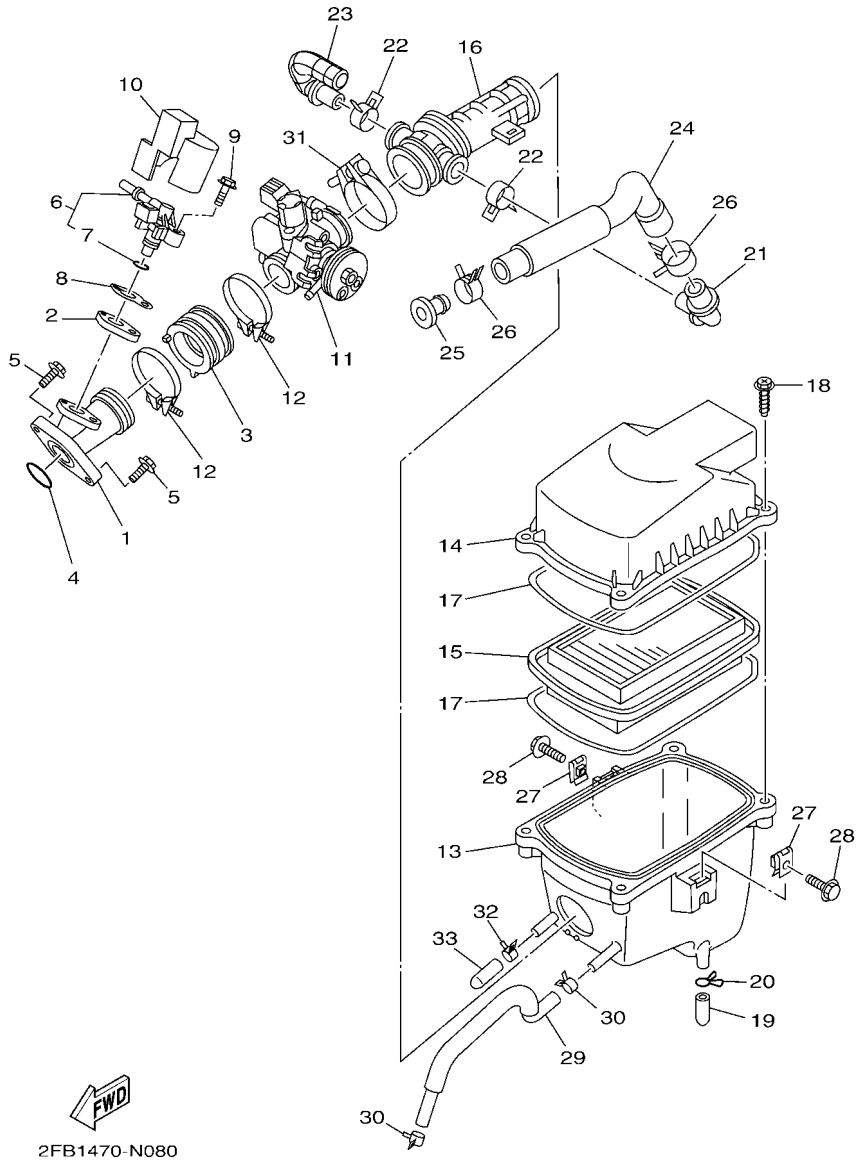

FIG. 8 INTAKE

REF. NO.	PART NO.	DESCRIPTION	2FB9					REMARKS
28	90119–06209	BOLT, WITH WASHER	2					
29	2FB–E1166–10	PIPE, BREATHER 1	1					
30	90467–13816	CLIP	2					
31	90450–39806	HOSE CLAMP ASSY	1					
32	90467–13802	CLIP	1					
33	2FB–E443H–00	PIPE, DRAIN 3	1					

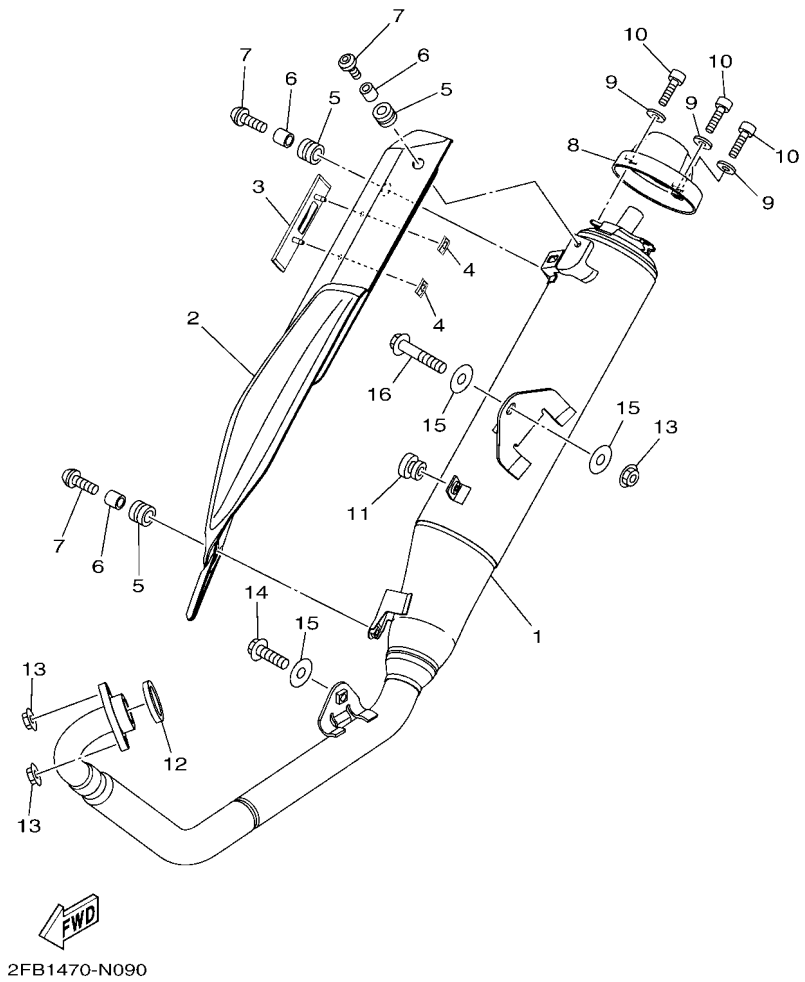

FIG. 9 EXHAUST

REF. NO.	PART NO.	DESCRIPTION	2FB9					REMARKS
1	2FB–E4703–00	MUFFLER COMP. 1	1					
2	1CK–E4718–00	PROTECTOR, MUFFLER 1	1					
3	1CK–E4728–00	PROTECTOR, MUFFLER 2	1					
4	90183–05M01	NUT, SPRING	2					
5	90480–12581	GROMMET	3					
6	90387–06023	COLLAR	3					
7	90111–06826	BOLT,HEX. SOCKET BUTTON	3					
8	1CK–E4799–00	CAP	1					
9	92990–06200	WASHER, PLAIN	3					
10	91380–06016	BOLT	3					
11	90480–10805	GROMMET	1					
12	21C–E4613–00	GASKET, EXHAUST PIPE	1					
13	95702–08500	NUT, FLANGE	3					
14	95812–08016	BOLT, FLANGE	1					
15	90201–08612	WASHER, PLATE	3					
16	95812–08040	BOLT, FLANGE	1					

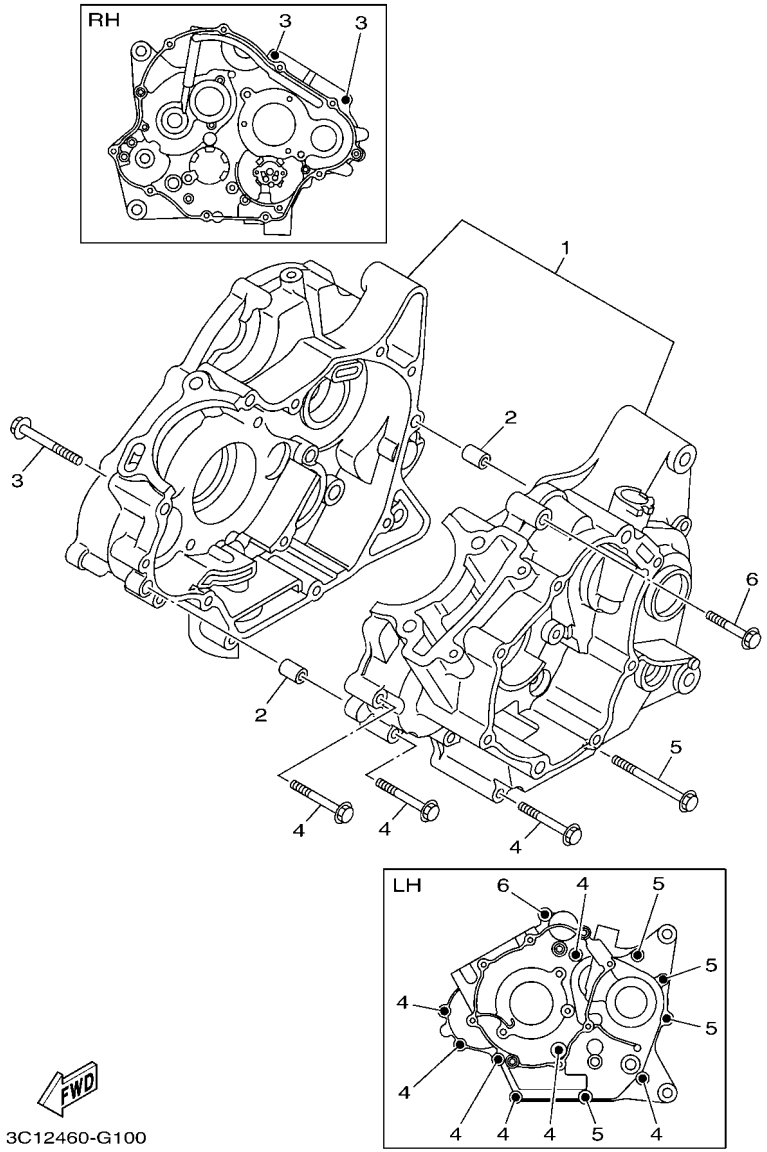

FIG. 10 CRANKCASE

REF. NO.	PART NO.	DESCRIPTION	2FB9					REMARKS
1	2FB–E5150–00	CRANKCASE ASSY	1					
2	91810–14809	PIN, DOWEL	2					
3	95022–06055	BOLT, FLANGE	2					
4	95022–06045	BOLT, FLANGE	7					
5	95022–06070	BOLT, FLANGE	4					
6	95022–06040	BOLT, FLANGE	1					

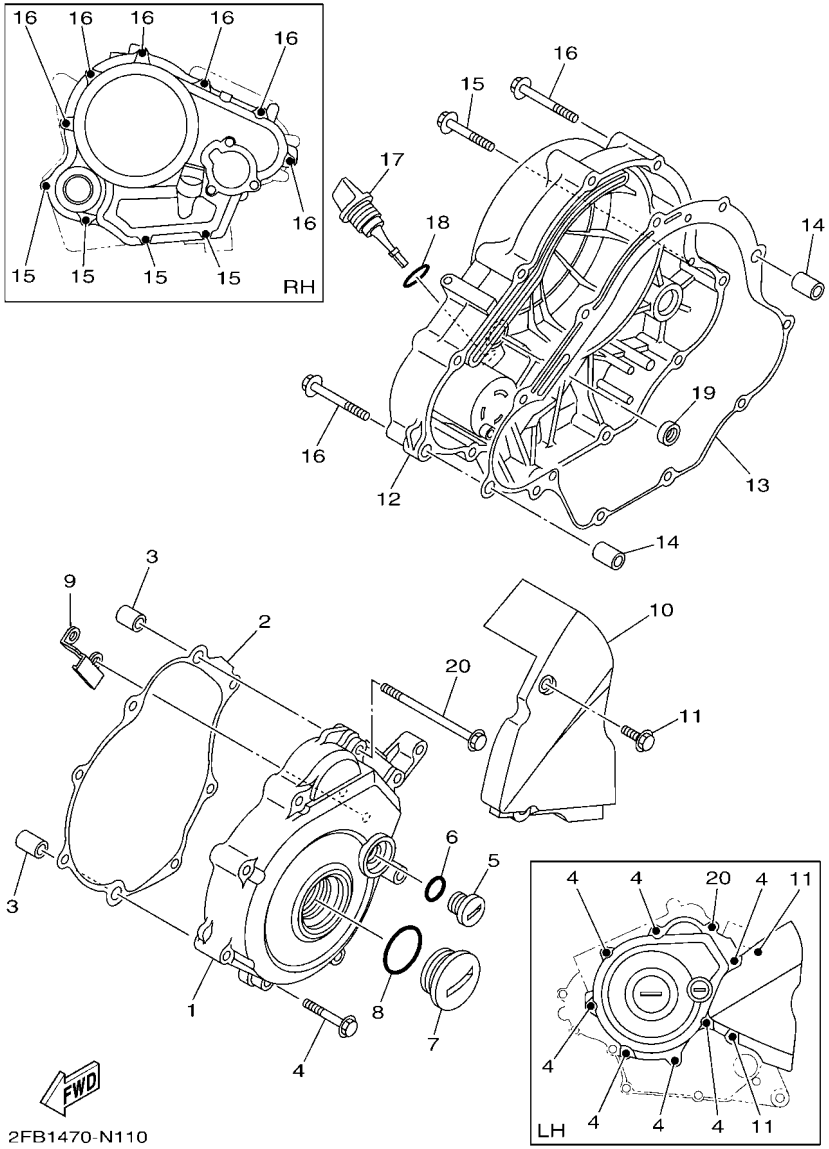

FIG. 11 CRANKCASE COVER 1

REF. NO.	PART NO.	DESCRIPTION	2FB9					REMARKS
1	2FB–E5411–00	COVER, CRANKCASE 1	1					
2	2FB–E5451–00	GASKET, CRANKCASE COVER 1	1					
3	91810–14809	PIN, DOWEL	2					
4	95022–06040	BOLT, FLANGE	7					
5	90340–14824	PLUG, STRAIGHT SCREW	1					
6	93210–14812	O-RING	1					
7	90340–32823	PLUG, STRAIGHT SCREW	1					
8	93210–32813	O-RING	1					
9	2FB–E5113–00	PLATE	1					
10	38B–E5418–00	COVER, CHAIN CASE	1					
11	95022–06016	BOLT, FLANGE	2					
12	1CK–E5421–00	COVER, CRANKCASE 2	1					
13	2FB–E5461–00	GASKET, CRANKCASE COVER 2	1					
14	91810–14809	PIN, DOWEL	2					
15	95022–06040	BOLT, FLANGE	4					
16	95022–06050	BOLT, FLANGE	6					
17	38B–E5362–00	PLUG, OIL LEVEL	1					
18	93210–19809	O-RING	1					
19	93101–10805	OIL SEAL	1					
20	95022–06090	BOLT, FLANGE	1					

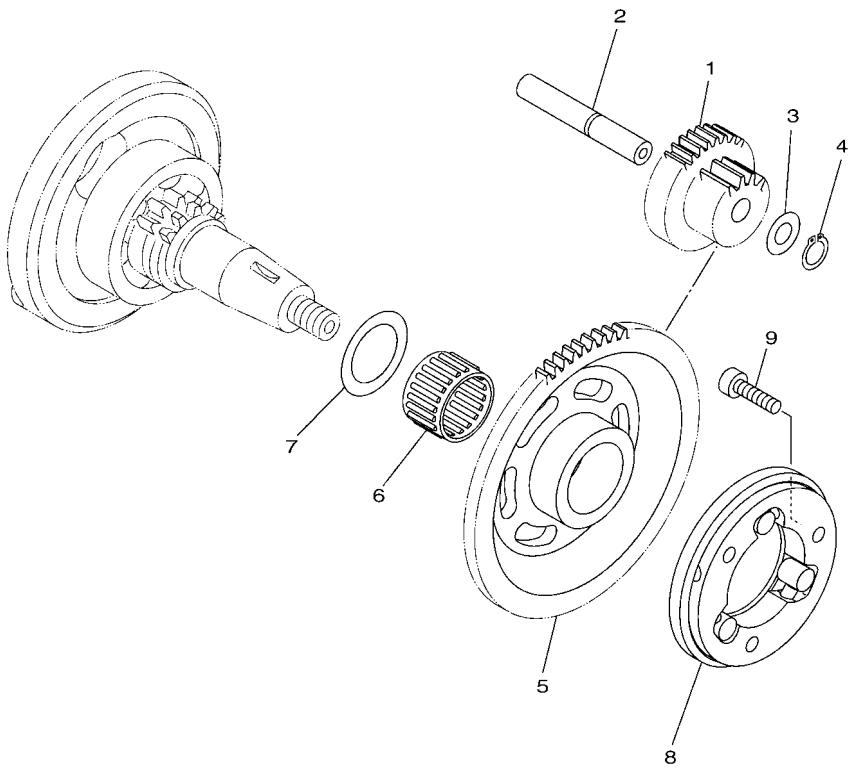

38B1470-H120

FIG. 12 STARTER CLUTCH

REF. NO.	PART NO.	DESCRIPTION	2FB9					REMARKS
1	1CK–E5514–00	GEAR 2	1					
2	38B–E5521–00	SHAFT 1	1					
3	90201–105E8	WASHER, PLATE	1					
4	99009–10400	CIRCLIP	1					
5	38B–E5524–10	WHEEL, STARTER	1					
6	93310–325X3	BEARING	1					
7	90201–25290	WASHER, PLATE	1					
8	21C–E5580–10	STARTER CLUTCH OUTER ASSY	1					
9	91312–06020	BOLT	3					

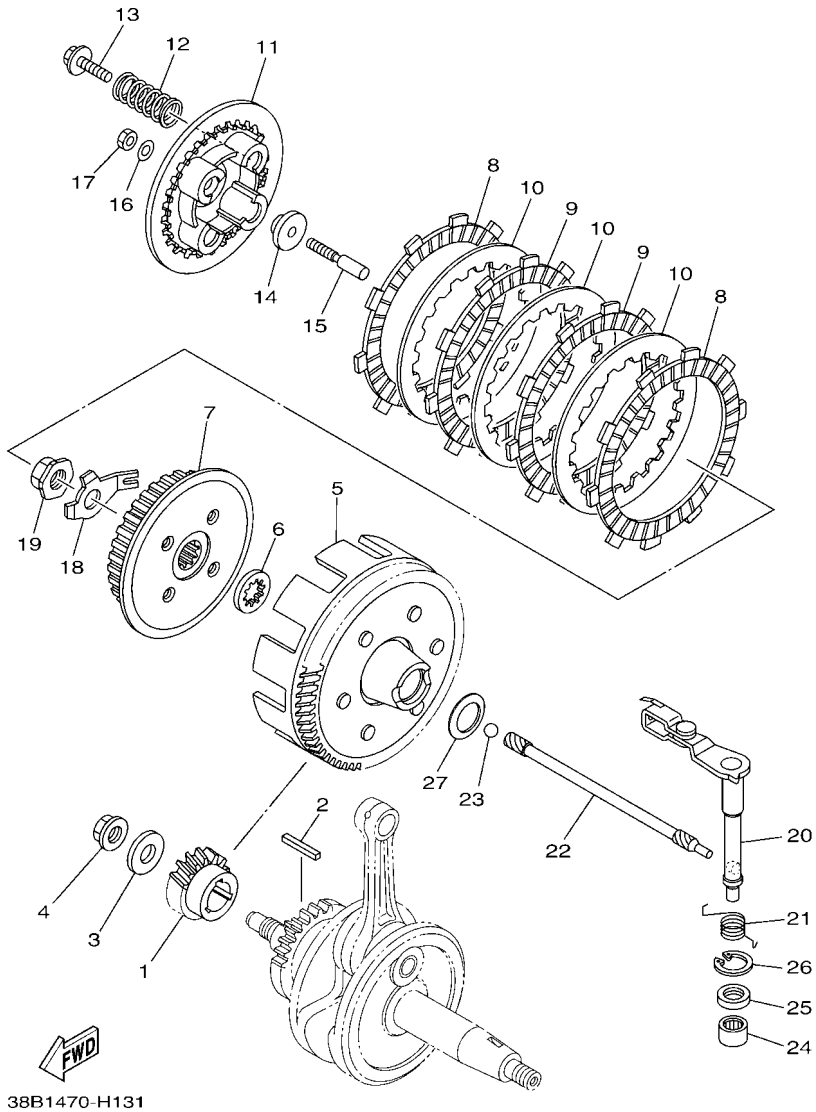

FIG. 13 CLUTCH

REF. NO.	PART NO.	DESCRIPTION	2FB9					REMARKS
1	38B–E6111–00	GEAR, PRIMARY DRIVE	1					
2	38B–E6193–00	KEY, FEATHER	1					
3	90201–12019	WASHER, PLATE	1					
4	90179–12802	NUT	1					
5	1CK–E6150–00	PRIMARY DRIVEN GEAR COMP.	1					
6	21C–E6154–00	PLATE, THRUST 1	1					
7	21C–E6371–00	BOSS, CLUTCH	1					
8	54B–E6321–00	PLATE, FRICTION	2					
9	21C–E6331–00	PLATE, FRICTION 2	2					
10	21C–E6324–00	PLATE, CLUTCH 1	3					
11	54B–E6351–00	PLATE, PRESSURE 1	1					
12	21C–E6333–00	SPRING, CLUTCH 1	4					
13	21C–E6337–00	SCREW, SPRING	4					
14	21C–E6358–00	PLATE, PUSH	1					
15	21C–E6356–01	ROD, PUSH 1	1					
16	54B–E6144–00	WASHER	1					
17	3C1–E6344–00	NUT, ADJUSTING	1					
18	21C–E6135–10	WASHER, LOCK	1					
19	90179–14001	NUT	1					
20	38B–E6380–01	PUSH LEVER ASSY	1					
21	1CK–E6345–00	SPRING, RETURN	1					
22	38B–E6357–01	ROD, PUSH 2	1					
23	93505–16844	BALL	1					
24	93315–112Y9	BEARING	1					
25	93102–12877	OIL SEAL	1					
26	99009–20500	CIRCLIP	1					
27	90208–20003	WASHER, CONICAL SPRING	1					

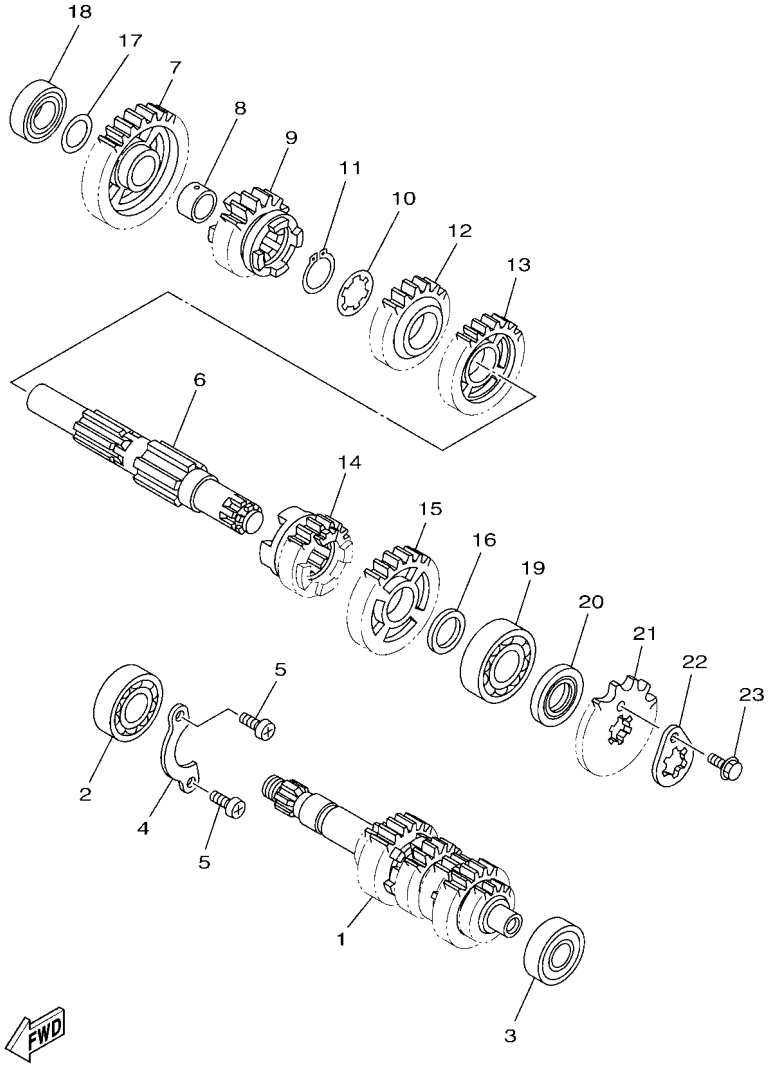

1CK1470-K141

FIG. 14 TRANSMISSION

REF. NO.	PART NO.	DESCRIPTION	2FB9					REMARKS
1	38B–E7410–00	MAIN AXLE COMP.	1					
2	93306–004XX	BEARING	1					
3	93306–202YE	BEARING	1					
4	38B–E7471–00	PLATE, COVER	1					
5	98512–06012	SCREW, PAN HEAD	2					
6	1CK–E7402–00	DRIVE AXLE ASSY	1					
7	38B–E7211–00	GEAR, 1ST WHEEL (34T)	1					
8	38B–E7258–00	COLLAR 1	1					
9	38B–E7251–00	GEAR, 5TH WHEEL (22T)	1					
10	90209–18208	WASHER	1					
11	93410–22039	CIRCLIP	1					
12	38B–E7241–00	GEAR, 4TH WHEEL (24T)	1					
13	38B–E7231–00	GEAR, 3RD WHEEL (30T)	1					
14	38B–E7261–00	GEAR, 6TH WHEEL (21T)	1					
15	38B–E7221–00	GEAR, 2ND WHEEL (30T)	1					
16	90201–20814	WASHER, PLATE	1					
17	90201–173F4	WASHER, PLATE	1					
18	93306–003YN	BEARING	1					
19	93306–204Y6	BEARING	1					
20	93102–20806	OIL SEAL	1					
21	93822–15808	SPROCKET, DRIVE (15T)	1					
22	4LS–E7456–00	HOLDER, SPROCKET	1					
23	95022–06010	BOLT, FLANGE	1					

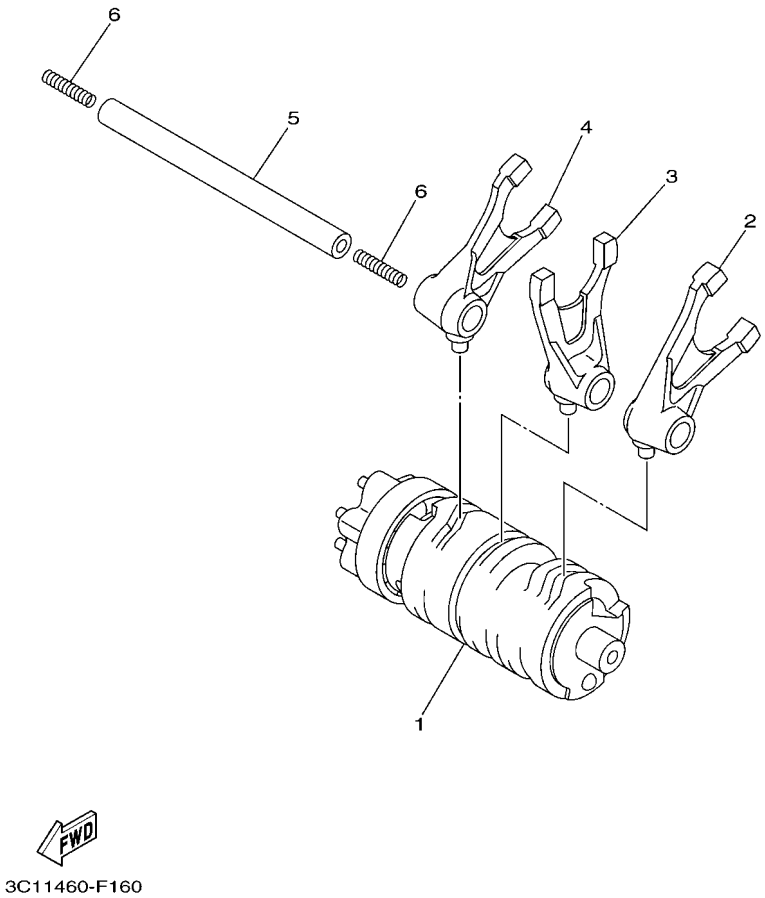

FIG. 15 SHIFT CAM & FORK

REF. NO.	PART NO.	DESCRIPTION	2FB9					REMARKS
1	2FB–E8540–00	SHIFT CAM ASSY	1					
2	38B–E8511–00	FORK, SHIFT 1	1					
3	38B–E8512–00	FORK, SHIFT 2	1					
4	38B–E8513–00	FORK, SHIFT 3	1					
5	38B–E8531–00	BAR, SHIFT FORK GUIDE 1	1					
6	90501–06800	SPRING, COMPRESSION	2					

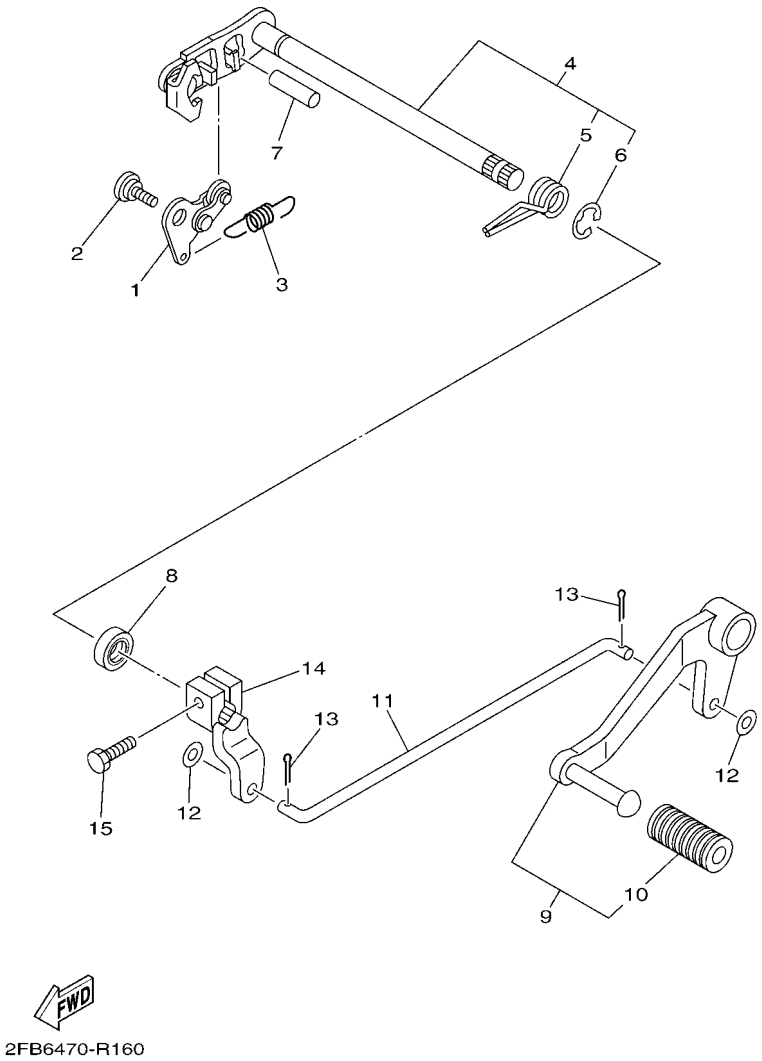

FIG. 16 SHIFT SHAFT

REF. NO.	PART NO.	DESCRIPTION	2FB9					REMARKS
1	21C–E8140–00	STOPPER LEVER ASSY	1					
2	90109–06259	BOLT	1					
3	38B–E8337–00	SPRING	1					
4	38B–E8101–00	SHIFT SHAFT ASSY	1					
5	90508–32837	.SPRING, TORSION	1					
6	99001–10600	.CIRCLIP	1					
7	93608–30839	PIN, DOWEL	1					
8	93102–12809	OIL SEAL	1					
9	20P–WE811–00	PEDAL, SHIFT	1					
10	20P–E8113–00	.COVER, SHIFT PEDAL	1					
11	20P–E8115–01	ROD, SHIFT	1					
12	92902–06200	WASHER	2					
13	91401–20012	PIN, COTTER	2					
14	20P–E8112–01	ARM, SHIFT	1					
15	97022–06020	BOLT, HEXAGON	1					

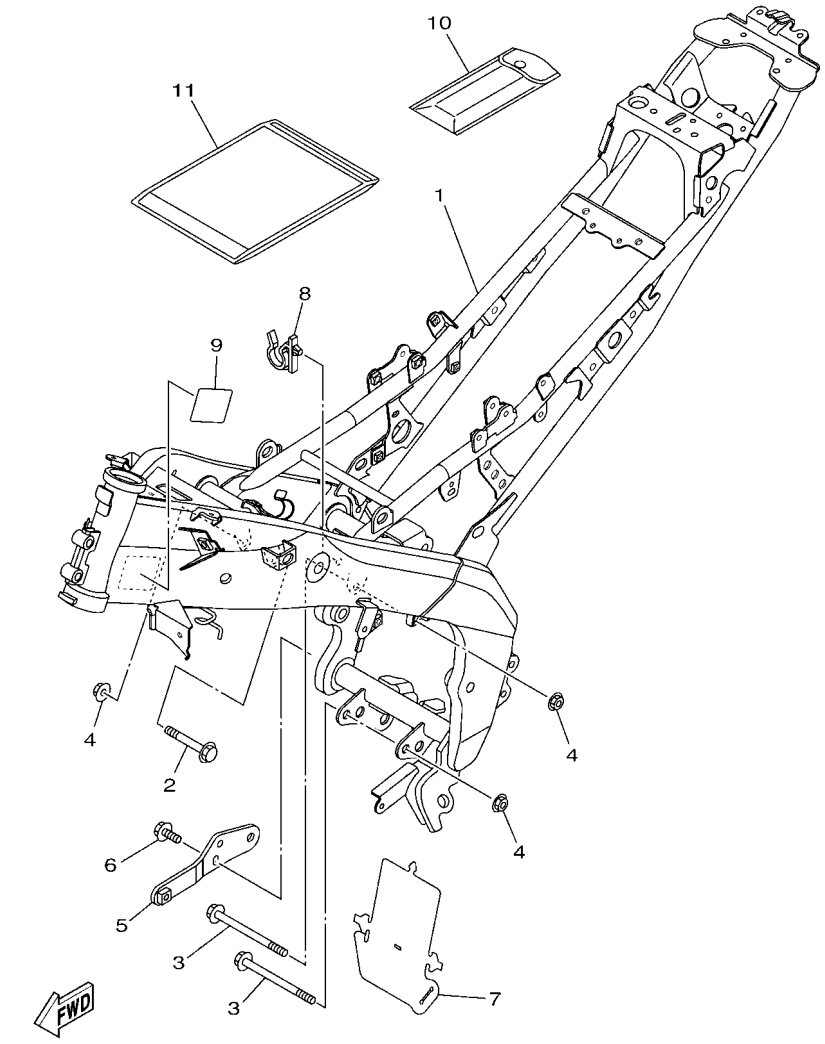

FIG. 17 FRAME

REF. NO.	PART NO.	DESCRIPTION	2FB9					REMARKS
1	2FB–F1110–00	FRAME COMP.	1					
2	90105–10323	BOLT, FLANGE	1					
3	90105–10857	BOLT, FLANGE	2					
4	90179–10811	NUT	3					
5	20P–F8284–00	BRACKET, UNDER	1					
6	95817–08016	BOLT, FLANGE	2					
7	20P–F2327–00	MUD GUARD 1	1					
8	20P–F1338–00	CLAMP	1					
9	1CK–F117G–00	PROTECTOR	1					
10	1CK–F8100–20	TOOL KIT	1					
11	1CK–F8186–00	POUCH	1					

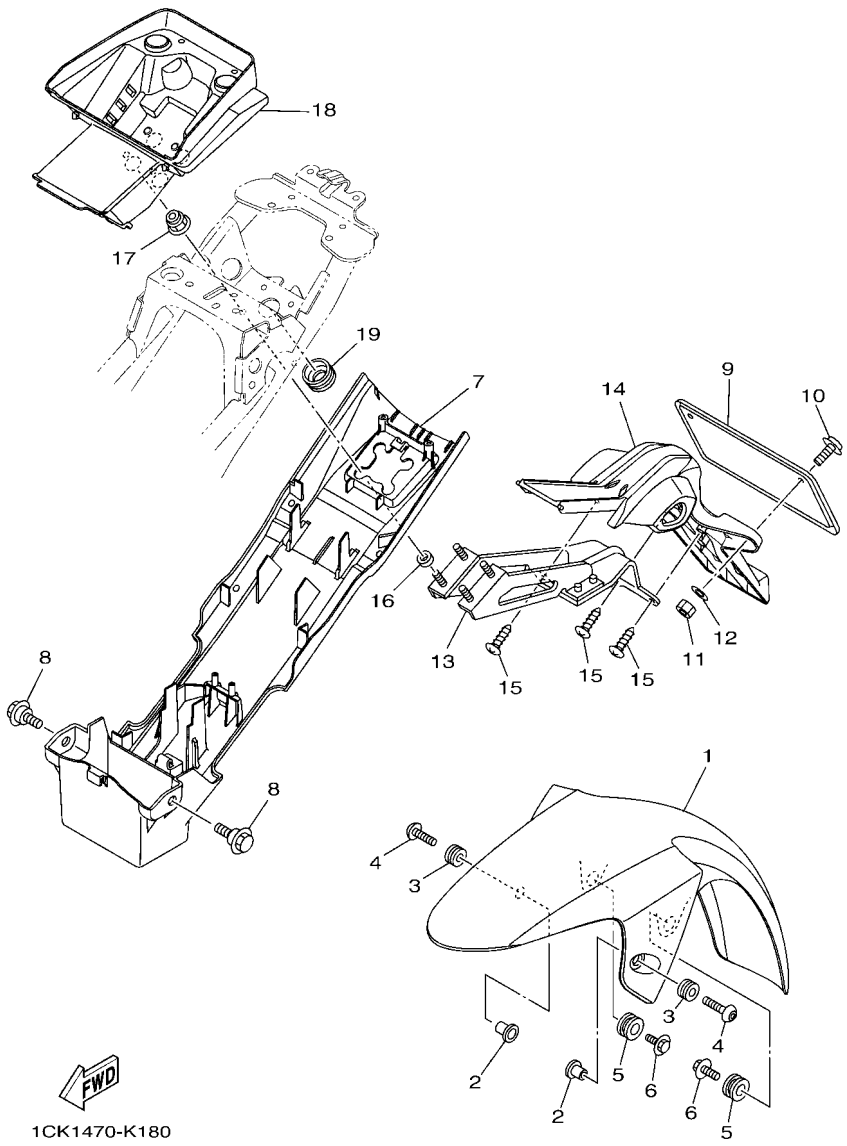

FIG. 18 FENDER

REF. NO.	PART NO.	DESCRIPTION	2FB9					REMARKS
1	1CK–F1511–00–7X	FENDER, FRONT	1					UR FOR BWC1
	1CK–F1511–00–3Y	FENDER, FRONT	1					UR FOR YRC2
2	90387–068C8	COLLAR	2					
3	90480–12805	GROMMET	2					
4	90111–06117	BOLT,HEX. SOCKET BUTTON	2					
5	90480–18859	GROMMET	2					
6	90119–06233	BOLT, WITH WASHER	2					
7	1CK–F1611–00	FENDER, REAR	1					
8	90109–06887	BOLT	2					
9	21C–F1681–00	PLATE, LICENSE	1					
10	97607–06214	SCREW, WITH WASHER	2					
11	95307–06600	NUT	2					
12	90201–06078	WASHER, PLATE	2					
13	1CK–F1640–00	REAR STAY COMP.	1					
14	1CK–F1629–00	GUARD, MUD	1					
15	97702–50016	SCREW, TAPPING	3					
16	90387–068G0	COLLAR	4					
17	90185–06801	NUT, SELF-LOCKING	4					
18	1CK–F160E–00	BOX	1					
19	90480–25482	GROMMET	1					

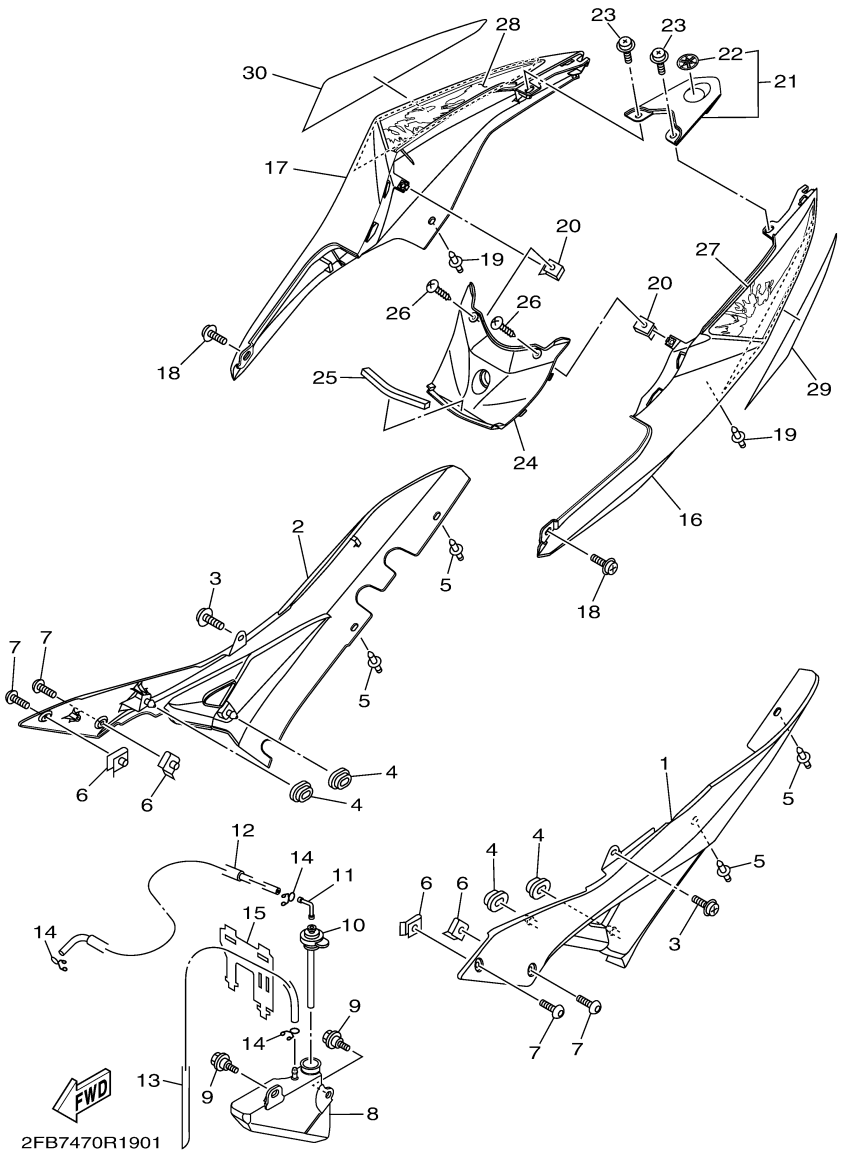

FIG. 19 SIDE COVER

REF. NO.	PART NO.	DESCRIPTION	2FB9					REMARKS
1	1CK–F1711–00	COVER, SIDE 1	1					
2	1CK–F1721–00	COVER, SIDE 2	1					
3	90159–06181	SCREW, WITH WASHER	2					
4	90480–01558	GROMMET	4					
5	90269–06814	RIVET	4					
6	90183–050A7	NUT, SPRING	4					
7	90111–05003	BOLT,HEX. SOCKET BUTTON	4					
8	2FB–F1871–00	TANK, RECOVERY	1					
9	90109–06183	BOLT	2					
10	20P–F1875–00	CAP	1					
11	20P–F1828–00	ELBOW	1					
12	90445–08831	HOSE	1					
13	90445–08832	HOSE	1					
14	90467–08003	CLIP	3					
15	20P–F1823–00	CLAMP, HOSE	1					
16	1CK–F1731–00–P6	COVER, SIDE 3	1					UR MNM3 FOR BWC1
	1CK–F1731–00–P6	COVER, SIDE 3	1					UR MNM3 FOR YRC2
17	1CK–F1741–00–P6	COVER, SIDE 4	1					UR MNM3 FOR BWC1
	1CK–F1741–00–P6	COVER, SIDE 4	1					UR MNM3 FOR YRC2
18	90159–06181	SCREW, WITH WASHER	2					
19	90269–06814	RIVET	2					
20	90183–05818	NUT, SPRING	2					
21	1CK–XF17C–70–P7	COVER, SIDE 5	1					MNM3
22	20P–F836B–00	.TUNING FORK MARK	1					
23	90159–06181	SCREW, WITH WASHER	2					
24	1CK–F171X–00–P7	COVER, SIDE 6	1					MNM3
25	90520–08801	DAMPER, PLATE	1					

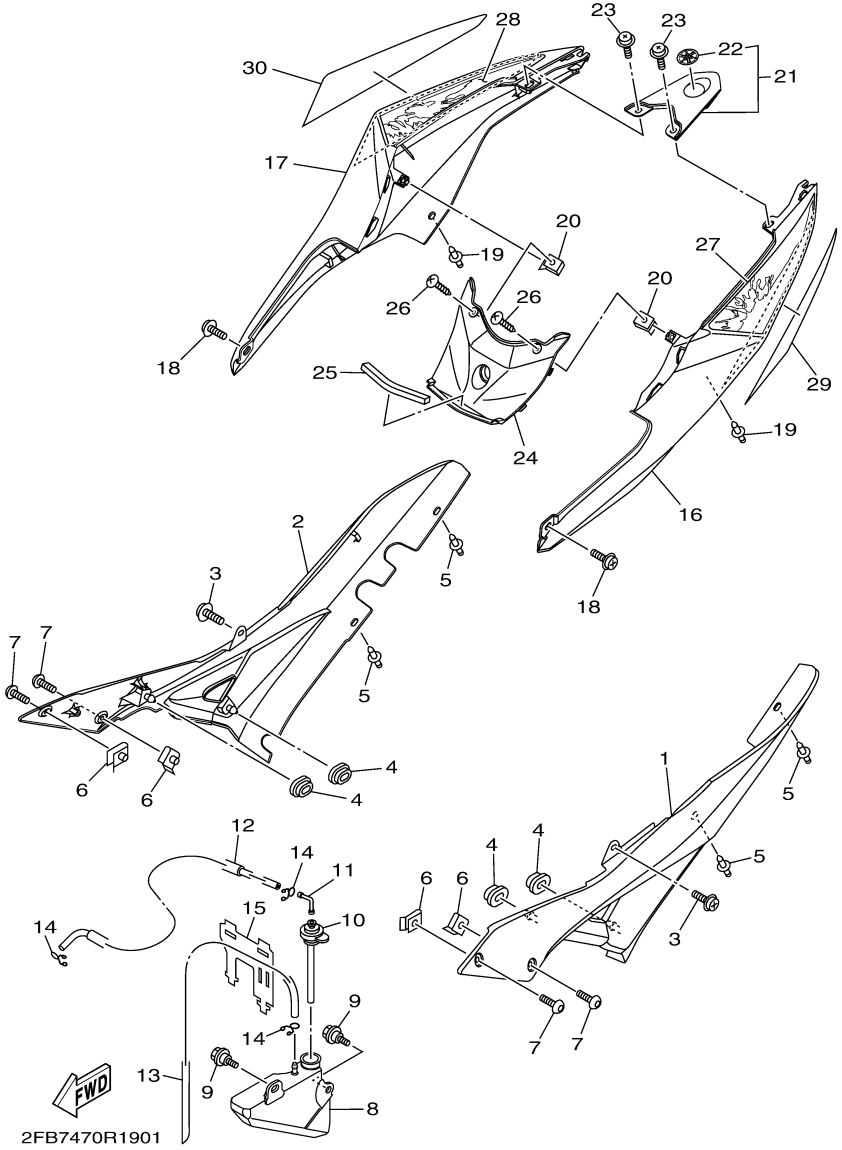

FIG. 19 SIDE COVER

REF. NO.	PART NO.	DESCRIPTION	2FB9					REMARKS
26	97707–50012	SCREW, TRUSS HEAD TAPPING	2					

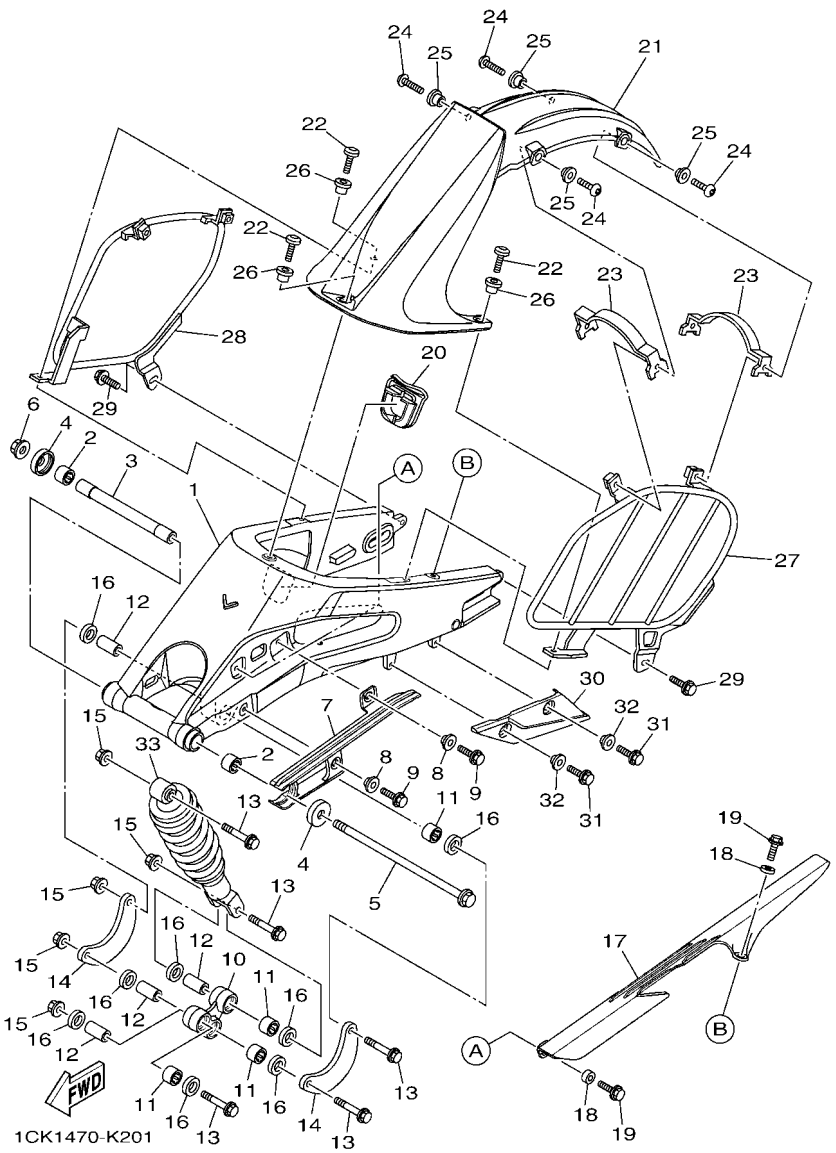

FIG. 20 REAR ARM & SUSPENSION

REF. NO.	PART NO.	DESCRIPTION	2FB9					REMARKS
1	1CK–F2110–00	REAR ARM COMP.	1					
2	93317–318Y5	BEARING	2					
3	20P–F2184–00	BUSH	1					
4	1CK–F2128–00	COVER, THRUST 1	2					
5	20P–F2141–00	SHAFT, PIVOT	1					
6	95707–12500	NUT, FLANGE	1					
7	1CK–F2151–00	SEAL, GUARD	1					
8	90387–07819	COLLAR	2					
9	95827–06014	BOLT, FLANGE	2					
10	1CK–F217A–00	ARM, RELAY	1					
11	93315–417Y4	BEARING	4					
12	90387–10814	COLLAR	4					
13	90105–10311	BOLT, FLANGE	5					
14	2PK–F217F–00	ROD, CONNECTING 1	2					
15	90179–10813	NUT	5					
16	93106–17802	OIL SEAL	8					
17	1CK–F2311–00	CASE, CHAIN	1					
18	90387–068G0	COLLAR	2					
19	95827–06014	BOLT, FLANGE	2					
20	1CK–F219X–00	COVER	1					
21	1CK–F1650–00	REAR FENDER COMP.	1					
22	90111–06139	BOLT,HEX. SOCKET BUTTON	3					
23	1CK–F164F–00	STAY 1	2					
24	92017–06014	BOLT, BUTTON HEAD	4					
25	90387–07819	COLLAR	4					
26	90387–068H0	COLLAR	3					
27	1CK–F1644–00	STAY, REAR	1					

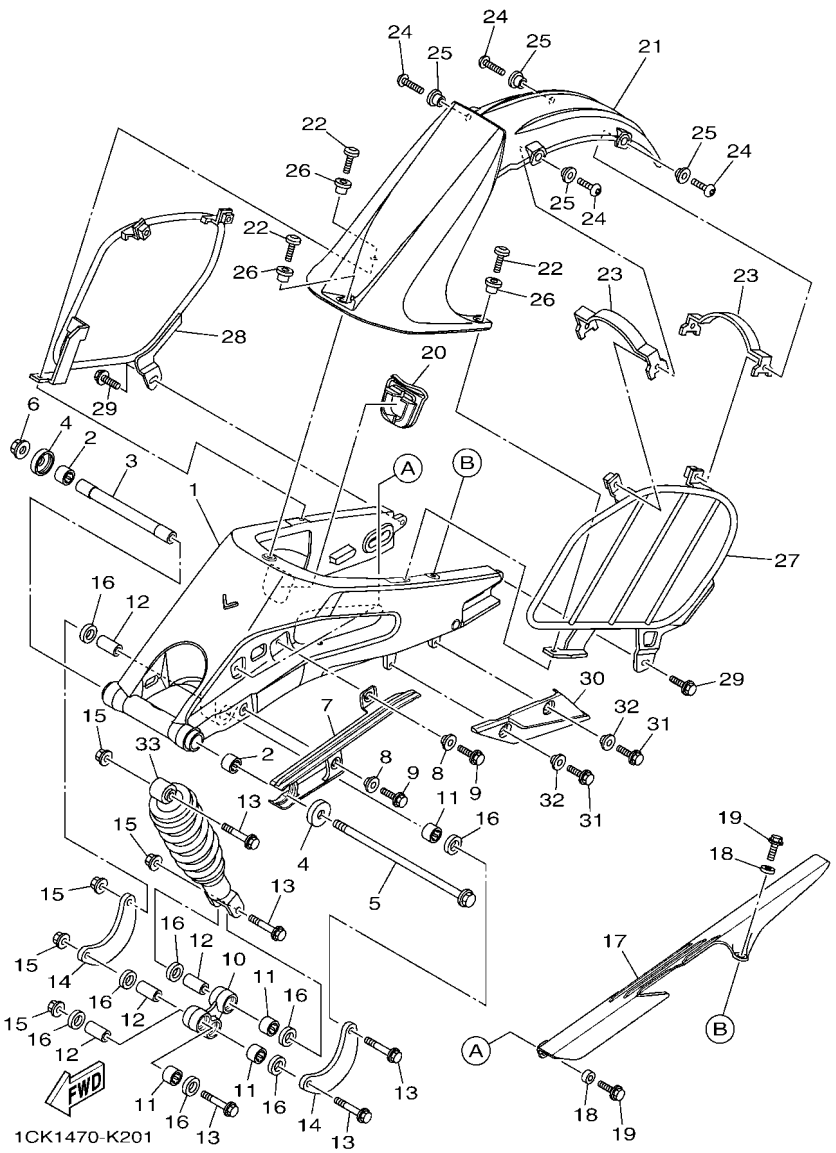

FIG. 20 REAR ARM & SUSPENSION

REF. NO.	PART NO.	DESCRIPTION	2FB9					REMARKS
28	1CK–F1645–00	STAY, REAR	1					
29	95827–06012	BOLT, FLANGE	2					
30	1CK–F2147–00	PROTECTOR, CHAIN	1					
31	95827–06014	BOLT, FLANGE	2					
32	90387–07819	COLLAR	2					
33	1CK–F2210–00	SHOCK ABSORBER ASSY, REAR	1					

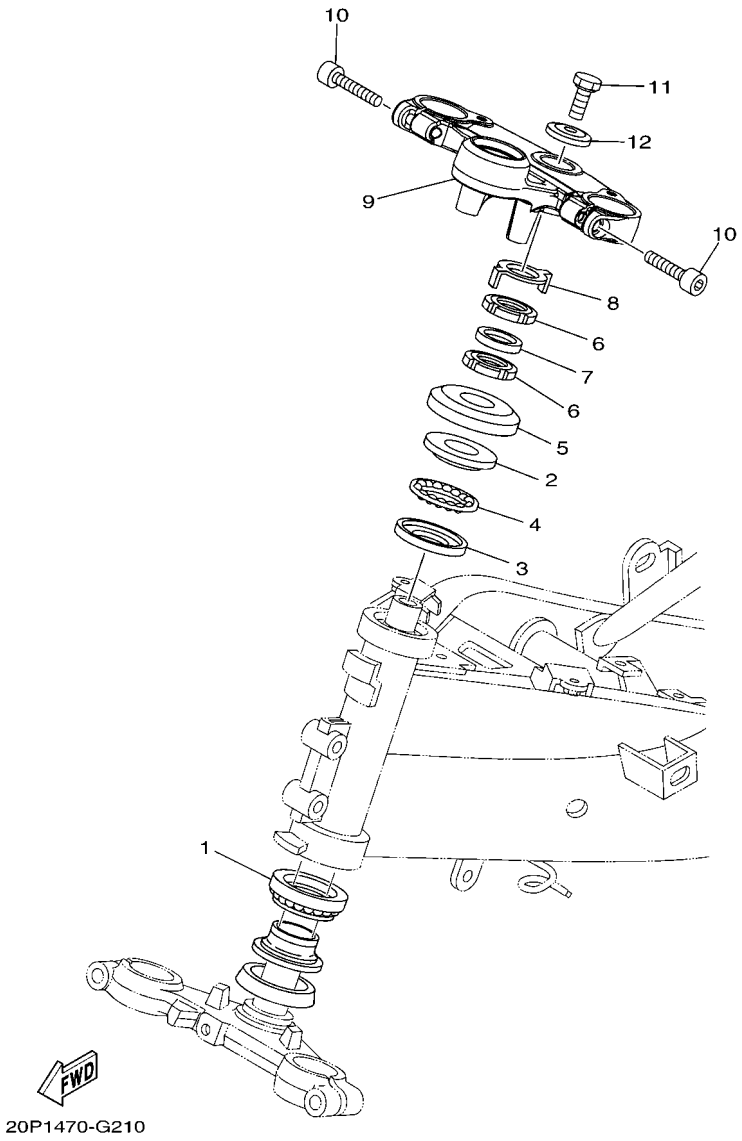

FIG. 21 STEERING

REF. NO.	PART NO.	DESCRIPTION	2FB9					REMARKS
1	2FB–F3873–00	BEARING, STEERING UPPER	1					
2	4FP–F3411–20	RACE, BALL 1	1					
3	1KL–F3412–10	RACE, BALL 2	1					
4	50P–F341E–10	RETAINER, BALL BEARING	1					
5	20P–F3416–00	COVER, BALL RACE 2	1					
6	90179–25615	NUT	2					
7	90202–26142	WASHER, PLATE	1					
8	20P–F3418–00	WASHER, SPECIAL	1					
9	20P–F3435–00	CROWN, HANDLE	1					
10	91317–08030	BOLT,HEX.SOCKET HEAD	2					
11	90105–10006	BOLT, FLANGE	1					
12	90209–10020	WASHER	1					

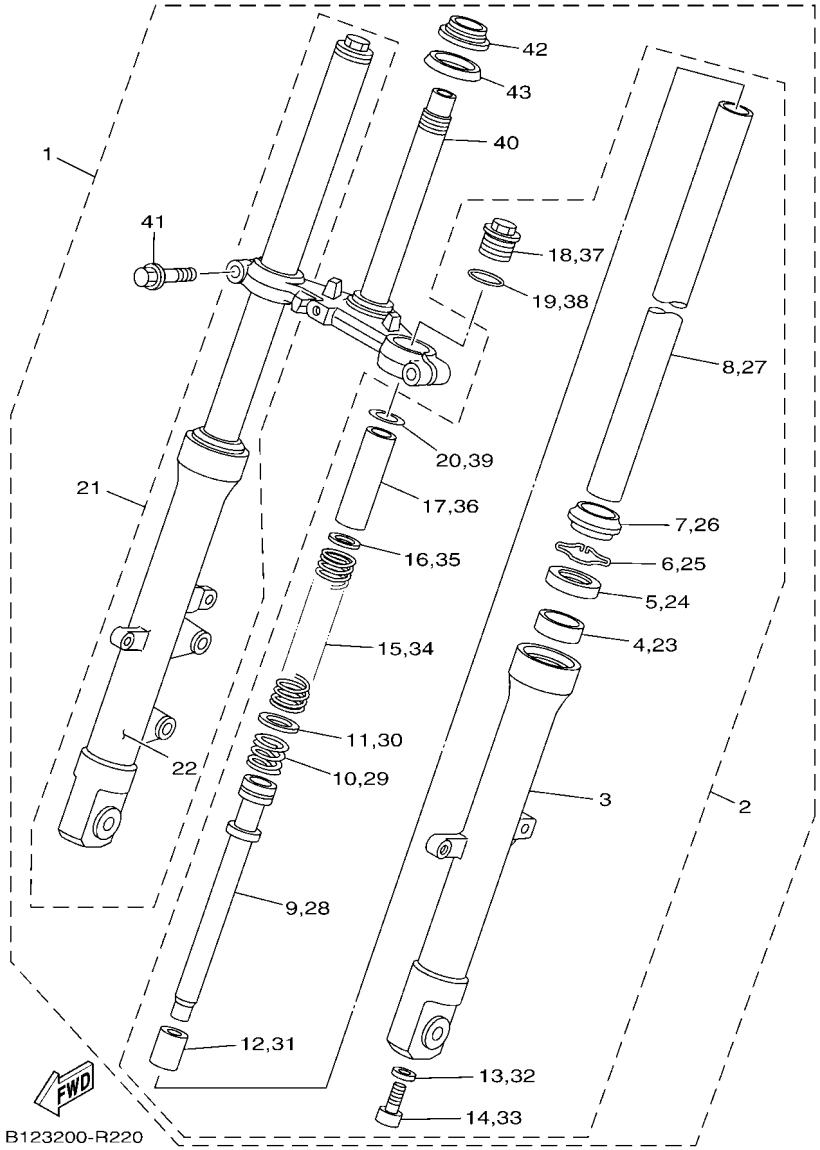

FIG. 22 FRONT FORK

REF. NO.	PART NO.	DESCRIPTION	2FB9					REMARKS
1	1CK–F3100–01	FRONT FORK ASSY	1					
2	1CK–F3102–00	.FRONT FORK ASSY (L.H)	1					
3	1CK–F3126–00	..TUBE, OUTER (L.H)	1					
4	20P–F3125–00	..METAL, SLIDE 1	1					
5	20P–F3145–00	..OIL SEAL	1					
6	20P–F3156–10	..RING, SNAP	1					
7	20P–F3144–00	..SEAL, DUST	1					
8	20P–F3110–00	..INNER TUBE COMP.1	1					
9	20P–F3170–00	..CYLINDER COMP., FRONT FORK	1					
10	20P–F3151–00	..SPRING, REBOUND	1					
11	20P–F3157–00	..RING, PISTON	1					
12	20P–F3173–00	..SPINDLE, TAPER	1					
13	21C–F3158–00	..GASKET	1					
14	21C–F3181–10	..BOLT, HEXAGON SOCKET HEAD	1					
15	20P–F3141–00	..SPRING, FRONT FORK	1					
16	20P–F3149–00	..WASHER, SPRING UPPER	1					
17	20P–F3118–00	..SPACER	1					
18	20P–F3111–00	..BOLT, CAP	1					
19	20P–F3114–00	..O-RING	1					
20	1CK–F3738–00	..WASHER 2	1					
21	1CK–F3103–00	.FRONT FORK ASSY (R.H)	1					
22	1CK–F3136–00	..TUBE, OUTER 2	1					
23	20P–F3125–00	..METAL, SLIDE 1	1					
24	20P–F3145–00	..OIL SEAL	1					
25	20P–F3156–10	..RING, SNAP	1					
26	20P–F3144–00	..SEAL, DUST	1					
27	20P–F3110–00	..INNER TUBE COMP.1	1					

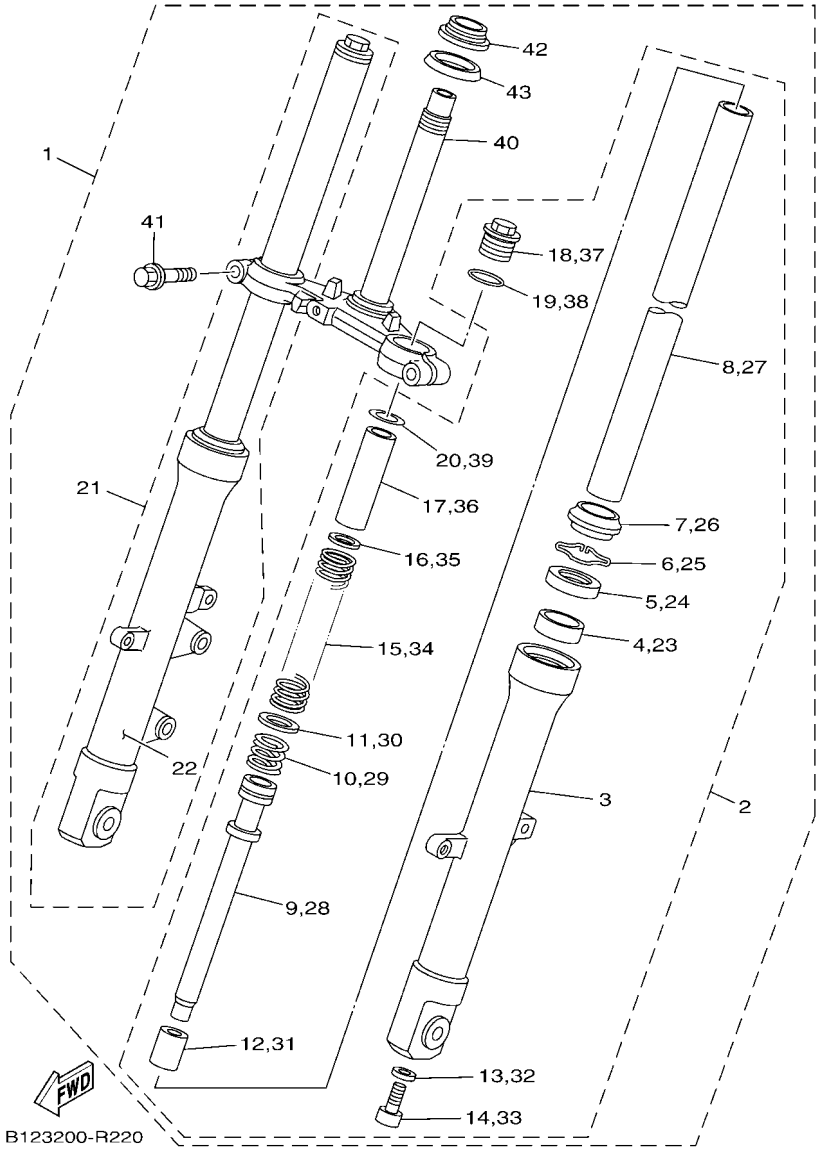

FIG. 22 FRONT FORK

REF. NO.	PART NO.	DESCRIPTION	2FB9					REMARKS
28	20P–F3170–00	..CYLINDER COMP., FRONT FORK	1					
29	20P–F3151–00	..SPRING, REBOUND	1					
30	20P–F3157–00	..RING, PISTON	1					
31	20P–F3173–00	..SPINDLE, TAPER	1					
32	21C–F3158–00	..GASKET	1					
33	21C–F3181–10	..BOLT, HEXAGON SOCKET HEAD	1					
34	20P–F3141–00	..SPRING, FRONT FORK	1					
35	20P–F3149–00	..WASHER, SPRING UPPER	1					
36	20P–F3118–00	..SPACER	1					
37	20P–F3111–00	..BOLT, CAP	1					
38	20P–F3114–00	..O-RING	1					
39	1CK–F3738–00	..WASHER 2	1					
40	20P–F3340–00	.UNDER BRACKET COMP.	1					
41	20P–F3346–00	.BOLT 1	2					
42	2FB–F3875–00	.BEARING, STEERING LOWER	1					
43	5YY–F3462–00	.SEAL, DUST	1					

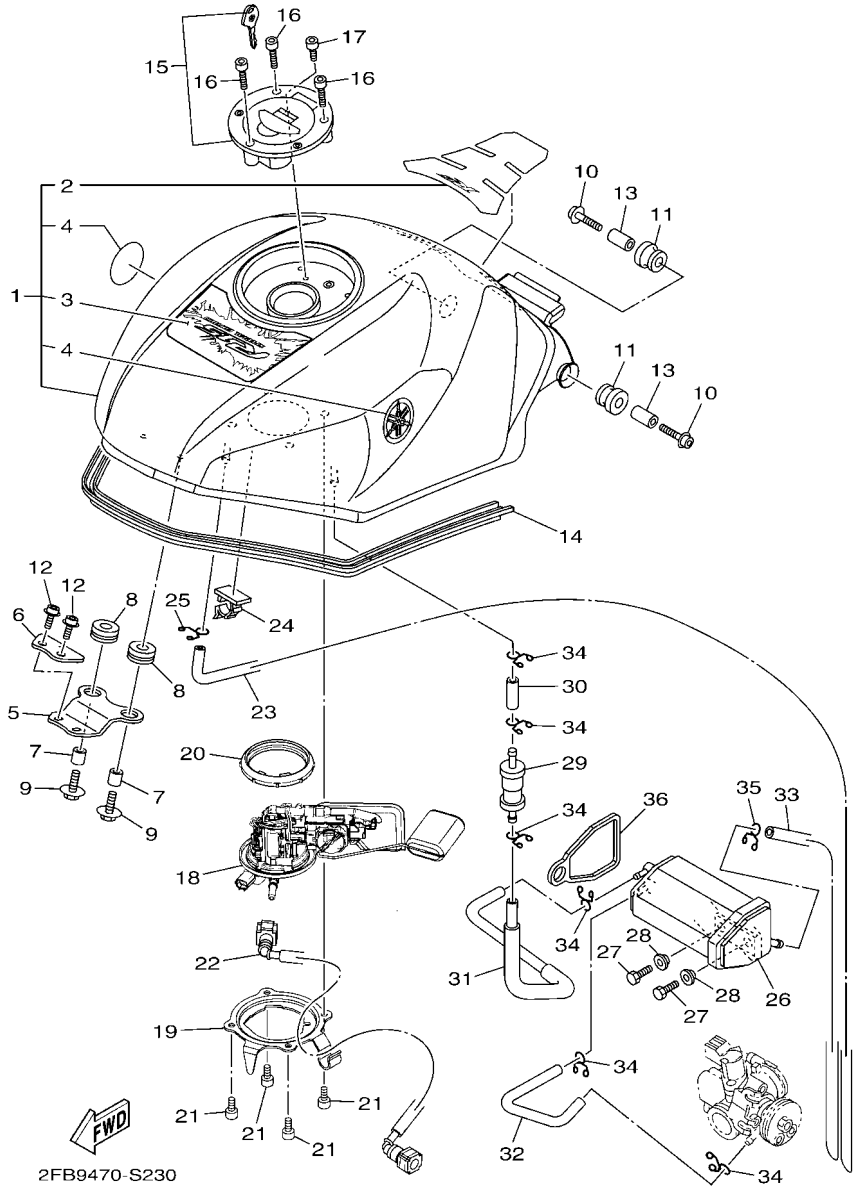

FIG. 23 FUEL TANK

REF. NO.	PART NO.	DESCRIPTION	2FB9					REMARKS
1	2FB–XF41A–30–P5	FUEL TANK COMP.	1					UR MNM3 FOR BWC1
	2FB–XF41A–40–P5	FUEL TANK COMP.	1					UR MNM3 FOR YRC2
2	1CK–F416B–10	.EMBLEM	1					
3	2FB–F4254–30	.GRAPHIC, FUEL TANK 7	1					UR FOR BWC1
	2FB–F4254–40	.GRAPHIC, FUEL TANK 7	1					UR FOR YRC2
4	5YY–F413B–00	.EMBLEM	2					
5	20P–F4191–00	BRACKET, FUEL TANK 1	1					
6	20P–F411F–00	PLATE, FITTING	1					
7	90387–068B2	COLLAR	2					
8	90480–15483	GROMMET	2					
9	90105–06169	BOLT, FLANGE	2					
10	90110–06287	BOLT, HEXAGON SOCKET HEAD	2					
11	90480–18549	GROMMET	2					
12	90110–06215	BOLT, HEXAGON SOCKET HEAD	2					
13	90387–06890	COLLAR	2					
14	20P–F4188–00	MOLD, FUEL TANK	1					
15	2FB–WF461–00	CAP ASSY WITH LOCK	1					
16	90110–05806	BOLT, HEXAGON SOCKET HEAD	3					
17	91312–05010	BOLT	1					
18	2FB–E3907–10	FUEL PUMP COMP.	1					
19	2FB–F4491–00	BRACKET, FUEL PUMP	1					
20	2GS–F414G–00	SEAL	1					
21	91312–05010	BOLT	4					
22	2FB–E3971–01	PIPE, FUEL 1	1					
23	20P–F4312–00	PIPE 2	1					
24	90464–10801	CLAMP	1					
25	90467–09006	CLIP	1					

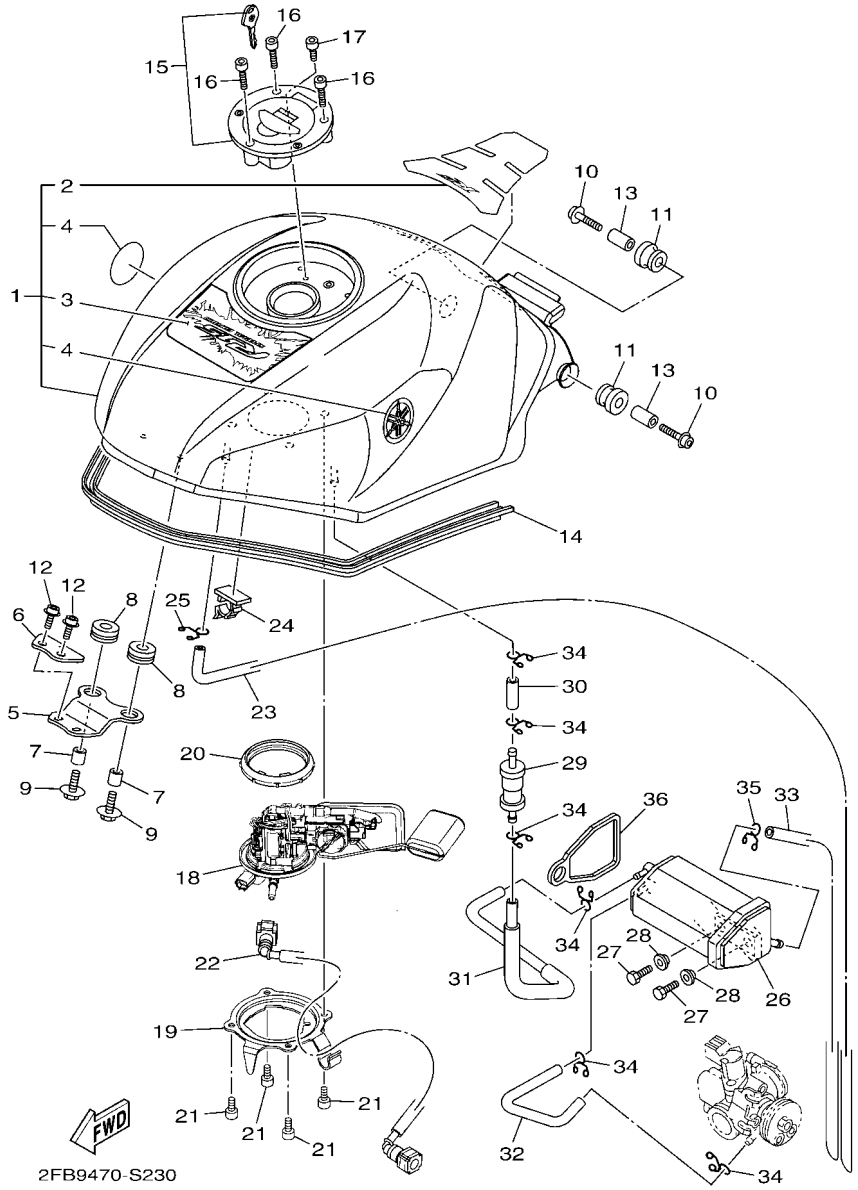

FIG. 23 FUEL TANK

REF. NO.	PART NO.	DESCRIPTION	2FB9					REMARKS
26	2FB–F4170–00	CANISTER ASSY	1					
27	97012–06014	BOLT	2					
28	90387–06048	COLLAR	2					
29	2FB–F4180–00	ROLL OVER VALVE ASSY	1					
30	90445–10832	HOSE	1					
31	2FB–F4313–00	PIPE 3	1					
32	2FB–F4314–00	PIPE 4	1					
33	2FB–F4315–00	PIPE 5	1					
34	90467–09006	CLIP	6					
35	90467–100A1	CLIP	1					
36	2FB–F483H–00	BAND	1					

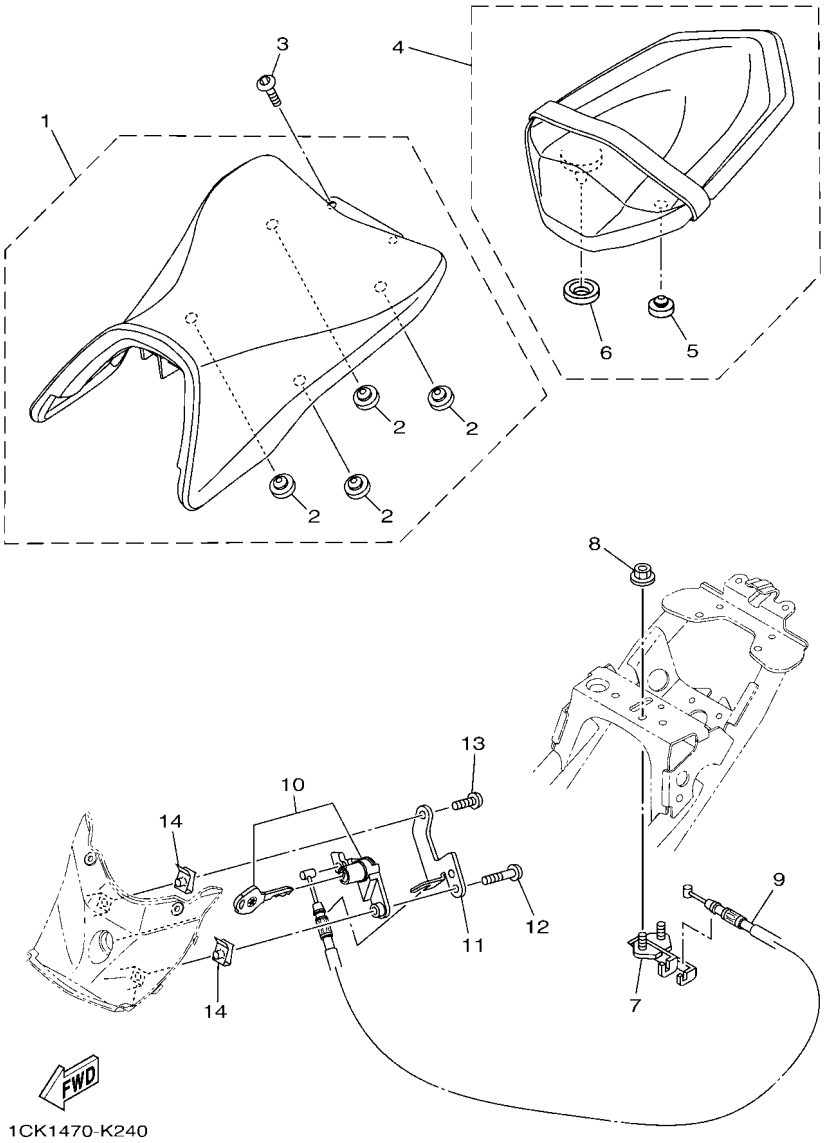

FIG. 24 SEAT

REF. NO.	PART NO.	DESCRIPTION	2FB9					REMARKS
1	1CK–F4710–00	SINGLE SEAT ASSY	1					
2	1PM–F4741–00	.PAD, SEAT	4					
3	92012–08012	BOLT, BUTTON HEAD	2					
4	1CK–F4750–00	TANDEM SEAT ASSY	1					
5	4LS–F4741–00	.PAD, SEAT	1					
6	21C–F4763–00	.PAD, SEAT 2	1					
7	20P–F4780–00	SEAT LOCK ASSY	1					
8	95707–06500	NUT, FLANGE	2					
9	1CK–F478E–00	CABLE, SEAT LOCK	1					
10	1CK–WF47E–00	SEAT LOCK ASSY	1					
11	1CK–F117K–00	STAY, LOCK	1					
12	98507–05020	SCREW, PAN HEAD	1					
13	98507–05012	SCREW, PAN HEAD	1					
14	90183–05076	NUT, SPRING	2					

FIG. 25 FRONT WHEEL

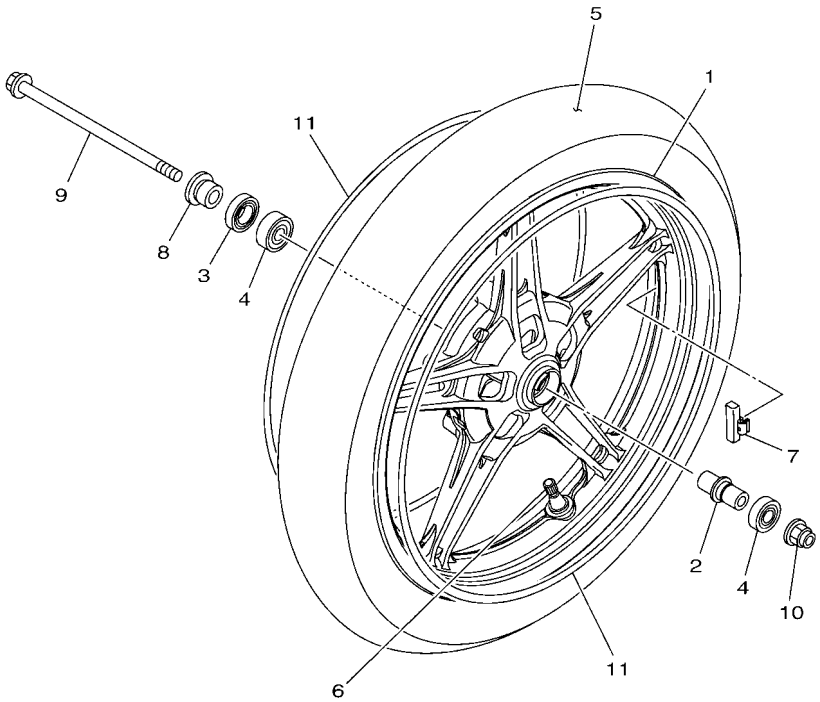

1CK3470-L250

REF. NO.	PART NO.	DESCRIPTION	2FB9					REMARKS
1	1CK–F5168–00–33	CAST WHEEL, FRONT	1					YB FOR BWC1,YRC2
2	1CK–F510C–00	COLLAR ASSY.	1					
3	93106–22808	OIL SEAL	1					
4	93306–252YH	BEARING	2					
5	94109–17803	TIRE (90/80-17 M/C 46P)	1					MRF
6	93900–00824	VALVE, RIM	1					
7	5MT–25398–00	BALANCER, WHEEL (10G)	1					UN
	5MT–25398–10	BALANCER, WHEEL (20G)	1					UN
	5MT–25398–20	BALANCER, WHEEL (30G)	1					UN
8	1CK–F5186–00	COLLAR, WHEEL	1					
9	1CK–F5181–00	AXLE, WHEEL	1					
10	95602–14200	NUT, SELF-LOCKING	1					
11	21C–F531B–31	EMBLEM, WHEEL	2					UR FOR BWC1
	21C–F531B–50	EMBLEM, WHEEL	2					UR FOR YRC2

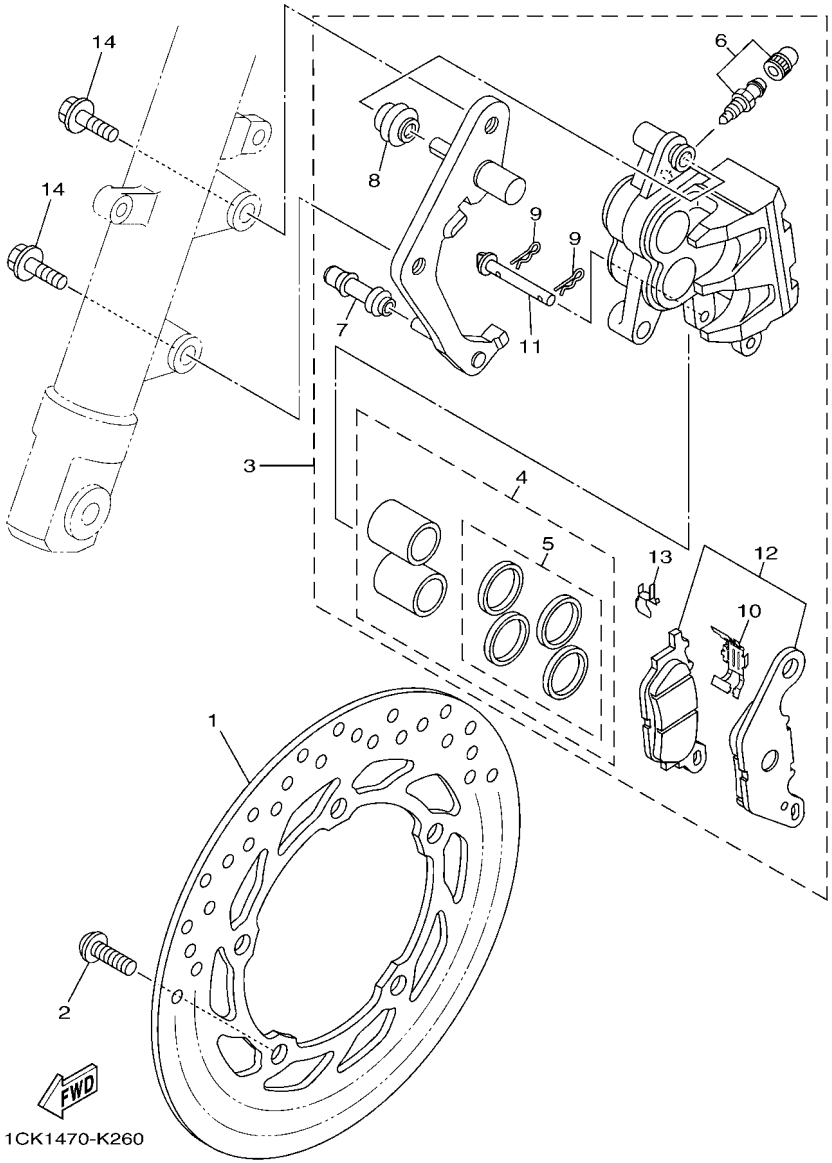

FIG. 26 FRONT BRAKE CALIPER

REF. NO.	PART NO.	DESCRIPTION	2FB9					REMARKS
1	1CK–F582U–10	DISK, BRAKE (RIGHT)	1					
2	90111–08847	BOLT,HEX. SOCKET BUTTON	5					
3	2FB–F580U–00	CALIPER ASSY (RIGHT)	1					
4	3C1–F5802–00	.PISTON ASSY, CALIPER	1					
5	3C1–F5803–50	..CALIPER SEAL KIT	1					
6	4C9–W0048–00	.BLEED SCREW KIT	1					
7	5YP–F5937–00	.BOOT 2	1					
8	5YP–F5917–00	.BOOT, CALIPER	1					
9	5YP–F5925–01	.CLIP	2					
10	5P0–F5919–00	.SUPPORT, PAD	1					
11	5YP–F5924–00	.PIN, PAD	1					
12	3C1–F5805–10	.BRAKE PAD KIT	1					
13	5YP–F5939–00	.CLIP, PAD	1					
14	90105–10082	BOLT, FLANGE	2					

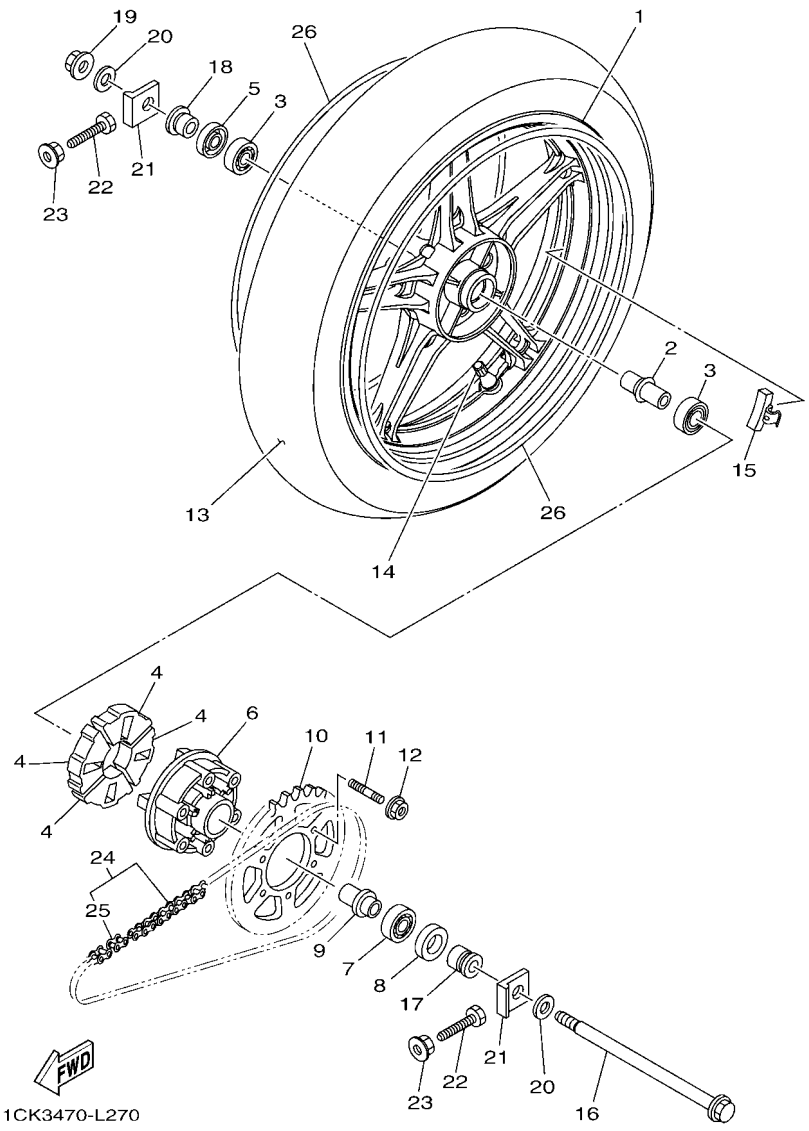

FIG. 27 REAR WHEEL

REF. NO.	PART NO.	DESCRIPTION	2FB9					REMARKS
1	1CK–F5338–00–33	CAST WHEEL, REAR	1					YB FOR BWC1,YRC2
2	1CK–F530S–00	COLLAR ASSY	1					
3	93306–252YH	BEARING	2					
4	54B–F5364–00	DAMPER	4					
5	93106–22808	OIL SEAL	1					
6	20P–F5366–00–33	CLUTCH, HUB	1					YB FOR BWC1,YRC2
7	93306–054Y5	BEARING	1					
8	93106–26801	OIL SEAL	1					
9	1CK–F5377–00	COLLAR, WHEEL	1					
10	1CK–F5447–00	SPROCKET, DRIVEN (47T)	1					
11	90116–08826	BOLT, STUD	6					
12	95602–08200	NUT, U FLANGE	6					
13	94113–17806	TIRE (130/70R17 M/C 62P)	1					MRF
14	93900–00824	VALVE, RIM	1					
15	5MT–25398–00	BALANCER, WHEEL (10G)	1					UN
	5MT–25398–10	BALANCER, WHEEL (20G)	1					UN
	5MT–25398–20	BALANCER, WHEEL (30G)	1					UN
16	1CK–F5381–00	AXLE, WHEEL	1					
17	1CK–F5386–00	COLLAR, SPROCKET AXLE	1					
18	1CK–F5383–00	COLLAR, WHEEL	1					
19	95602–14200	NUT, SELF-LOCKING	1					
20	90201–15837	WASHER, PLATE	2					
21	1CK–F5388–00	PULLER, CHAIN 1	2					
22	90101–08006	BOLT	2					
23	95702–08500	NUT, FLANGE	2					
24	94A40–01132	SET, CHAIN (R428NXR-132LL)	1					
25	94668–B5021	.JOINT, CHAIN (R428NXR)	1					

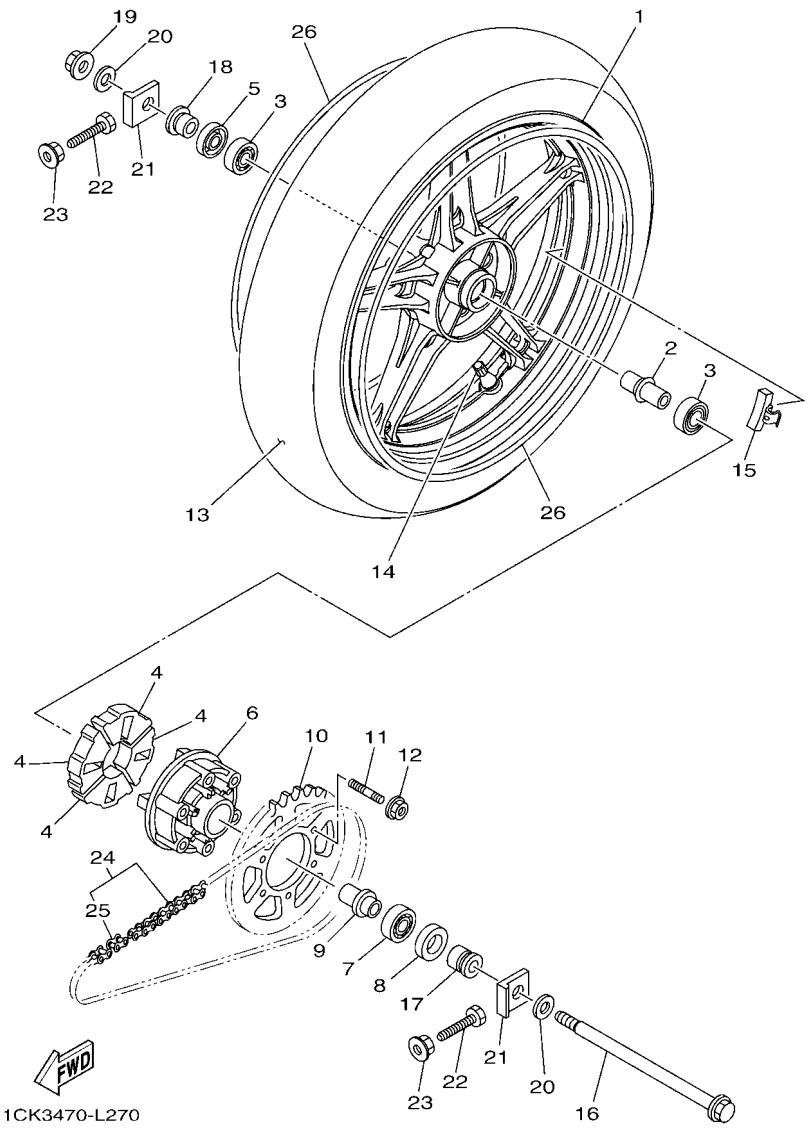

FIG. 27 REAR WHEEL

REF. NO.	PART NO.	DESCRIPTION	2FB9					REMARKS
26	21C–F531B–31	EMBLEM, WHEEL	2					UN FOR BWC1
	21C–F531B–50	EMBLEM, WHEEL	2					UN FOR YRC2

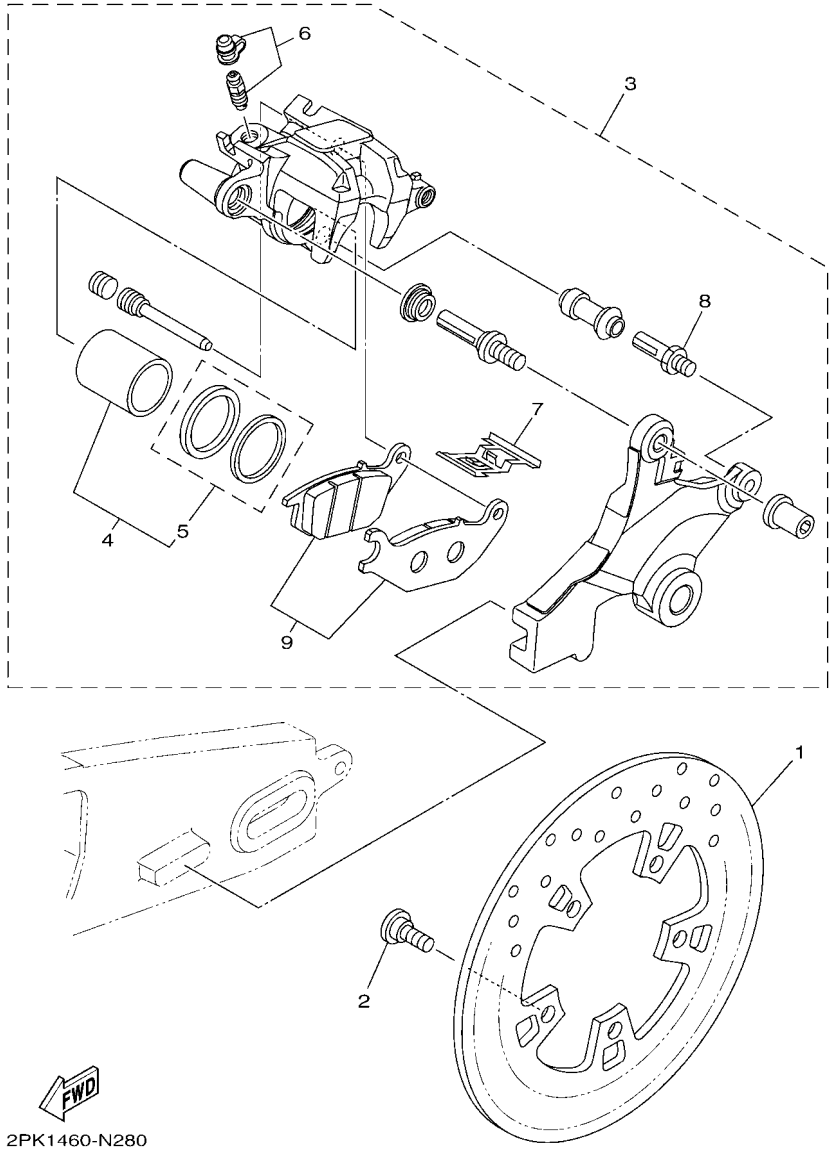

FIG. 28 REAR BRAKE CALIPER

REF. NO.	PART NO.	DESCRIPTION	2FB9					REMARKS
1	1CK–F582W–10	DISK, REAR BRAKE 2	1					
2	90109–08015	BOLT	5					
3	2FB–F580W–00	CALIPER ASSY, REAR 2	1					
4	4S3–F5802–00	.PISTON ASSY, CALIPER	1					
5	3GD–F5803–00	..CALIPER SEAL KIT	1					
6	4S3–W0048–00	.BLEED SCREW KIT	1					
7	4S3–F5919–00	.SUPPORT, PAD	1					
8	3SP–F5914–51	.PIN, SLIDE	1					
9	4S3–F5805–00	.BRAKE PAD KIT	1					

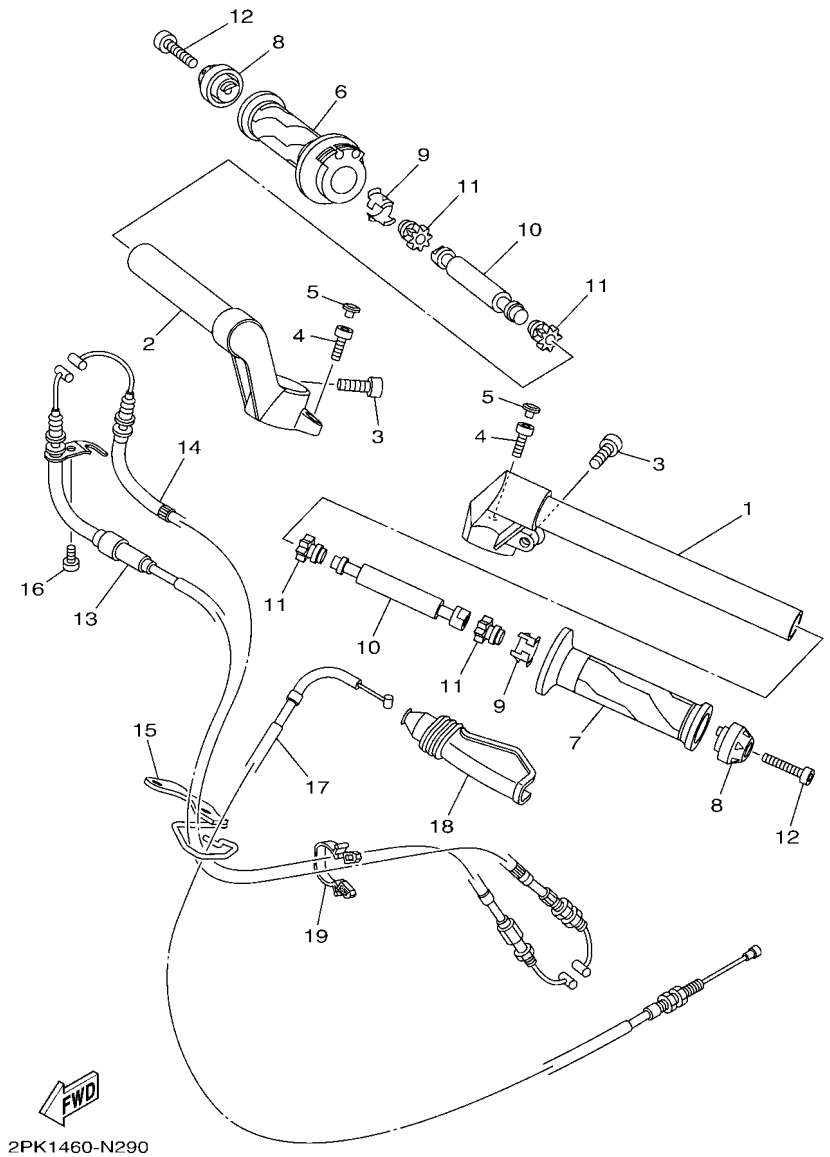

FIG. 29 STEERING HANDLE & CABLE

REF. NO.	PART NO.	DESCRIPTION	2FB9					REMARKS
1	20P–F6121–00	HANDLEBAR (LEFT)	1					
2	20P–F6122–00	HANDLEBAR (RIGHT)	1					
3	91317–08025	BOLT,HEX.SOCKET HEAD	2					
4	91317–06020	BOLT,HEX.SOCKET HEAD	2					
5	20P–F3469–00	CAP, BOLT	2					
6	1CK–F6240–00	GRIP ASSY	1					
7	20P–F6241–00	GRIP	1					
8	20P–F6246–00	END, GRIP	2					
9	20P–F6257–00	STOPPER	2					
10	20P–F622H–00	WEIGHT	2					
11	20P–F622F–00	DAMPER, LOCATING 1	4					
12	91312–06030	BOLT	2					
13	2FB–F6311–00	CABLE, THROTTLE 1	1					
14	2FB–F6312–00	CABLE, THROTTLE 2	1					
15	20P–F6315–00	GUIDE, WIRE	1					
16	98507–05012	SCREW, PAN HEAD	1					
17	20P–F6335–01	CABLE, CLUTCH	1					
18	20P–F6372–00	COVER, HANDLE LEVER 1	1					
19	90464–24802	CLAMP	1					

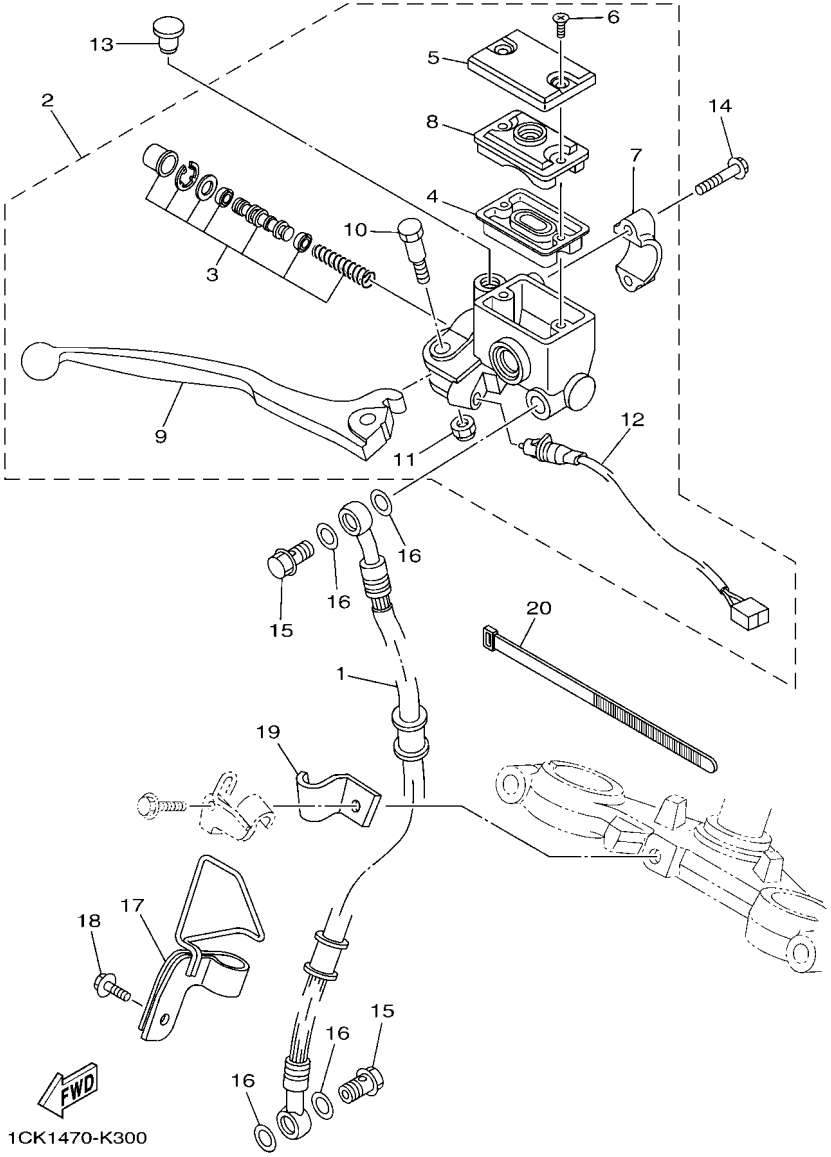

FIG. 30 FRONT MASTER CYLINDER

REF. NO.	PART NO.	DESCRIPTION	2FB9					REMARKS
1	20P–F5872–00	HOSE, BRAKE 1	1					
2	1CK–F583T–00	MASTER CYLINDER ASSY	1					
3	5P0–W0041–10	.CYLINDER KIT, MASTER	1					
4	3RW–F5854–00	.DIAPHRAGM, RESERVOIR	1					
5	3C1–F5852–00	.CAP, RESERVOIR	1					
6	36Y–2589H–00	.SCREW	2					
7	3RW–F5867–00	.BRACKET, MASTER CYLINDER	1					
8	3C1–F5855–00	.BUSH,DIAPHRAGM	1					
9	38B–H3922–00	.LEVER 2	1					
10	90109–06577	.BOLT	1					
11	95602–06100	.NUT, S/L	1					
12	1CK–H3980–00	.FRONT STOP SWITCH ASSY	1					
13	90338–09802	PLUG	1					
14	95027–06025	BOLT, FLANGE	2					
15	90401–10820	BOLT, UNION	2					
16	90201–10118	WASHER, PLATE	4					
17	1CK–F5886–00	HOLDER, BRAKE HOSE	1					
18	95022–06014	BOLT, FLANGE	1					
19	20P–F5876–00	HOLDER, BRAKE HOSE 2	1					
20	5TS–H3936–01	BAND, SWITCH CORD	1					

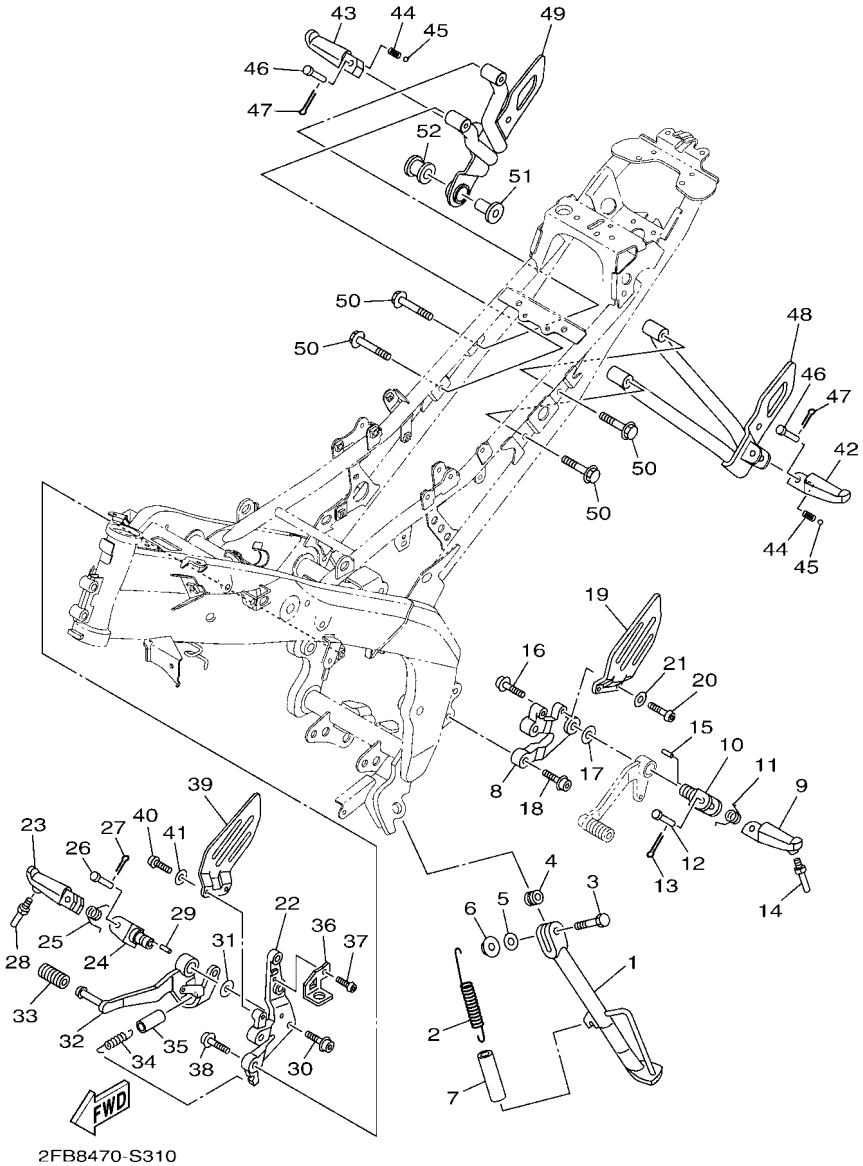

FIG. 31 STAND & FOOTREST

REF. NO.	PART NO.	DESCRIPTION	2FB9					REMARKS
1	2FB–F7311–00	STAND, SIDE	1					
2	90506–28800	SPRING, TENSION	1					
3	90105–106A7	BOLT, FLANGE	1					
4	90387–10003	COLLAR	1					
5	92907–10600	WASHER, PLATE	1					
6	95617–10100	NUT, U	1					
7	90445–21848	HOSE (L70)	1					
8	20P–F7442–00	BRACKET 2	1					
9	20P–F7451–00	FOOTREST	1					
10	20P–F7411–00	FOOTREST 1	1					
11	90508–183B9	SPRING, TORSION	1					
12	90240–08800	PIN, CLEVIS	1					
13	91401–20012	PIN, COTTER	1					
14	20P–F7435–00	BOLT	1					
15	90249–02002	PIN	1					
16	90110–10012	BOLT, HEXAGON SOCKET HEAD	1					
17	90201–10066	WASHER, PLATE	1					
18	90110–08814	BOLT, HEXAGON SOCKET HEAD	2					
19	2FB–F7445–00	PLATE 1	1					
20	92012–06020	BOLT, BUTTON HEAD	2					
21	92902–06600	WASHER, PLATE	2					
22	20P–F7443–00	BRACKET 3	1					
23	20P–F7461–00	FOOTREST	1					
24	20P–F7411–00	FOOTREST 1	1					
25	90508–184B0	SPRING, TORSION	1					
26	90240–08800	PIN, CLEVIS	1					
27	91401–20012	PIN, COTTER	1					

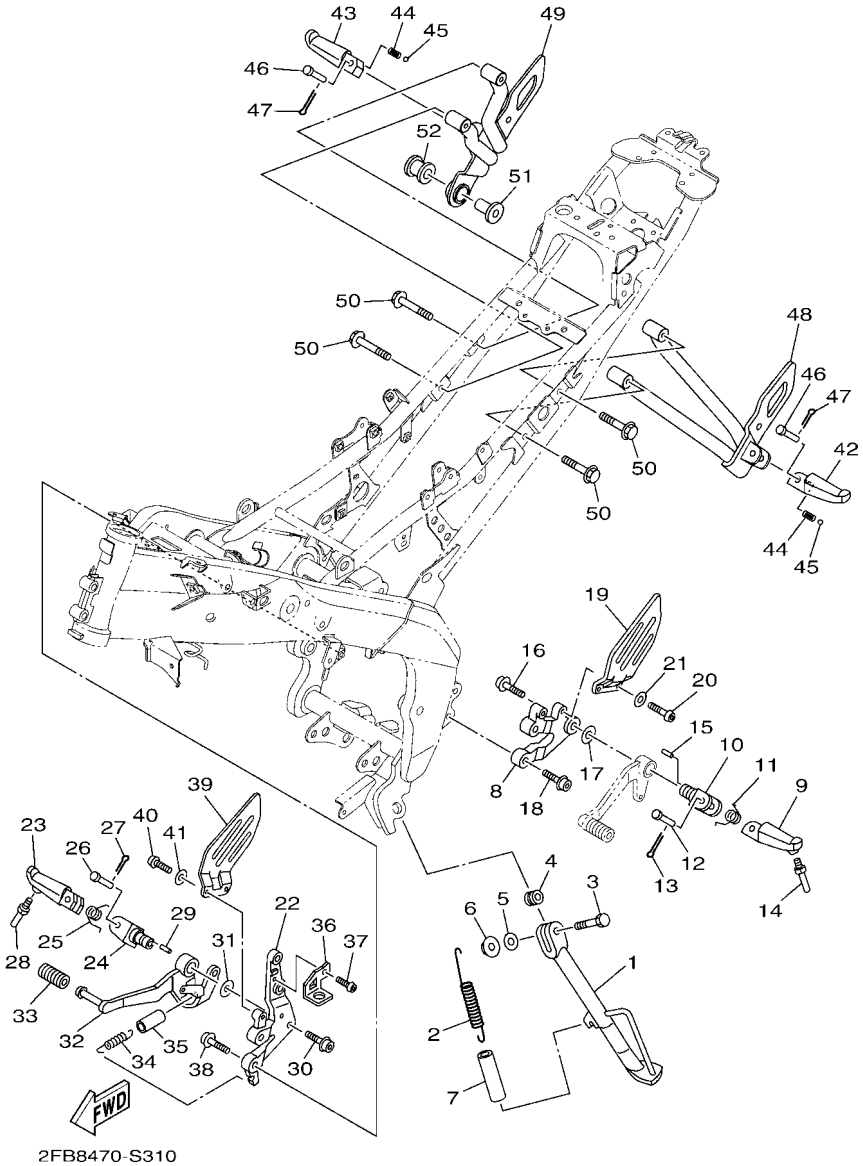

FIG. 31 STAND & FOOTREST

REF. NO.	PART NO.	DESCRIPTION	2FB9					REMARKS
28	20P–F7435–00	BOLT	1					
29	90249–02002	PIN	1					
30	90110–10012	BOLT, HEXAGON SOCKET HEAD	1					
31	90201–10066	WASHER, PLATE	1					
32	1CK–F7211–00	PEDAL, BRAKE	1					
33	20P–E8113–00	COVER, SHIFT PEDAL	1					
34	90506–20193	SPRING, TENSION	1					
35	90445–16807	HOSE	1					
36	1CK–F144G–00	STAY, STOP SWITCH	1					
37	92012–06010	BOLT, BUTTON HEAD	1					
38	90110–08814	BOLT, HEXAGON SOCKET HEAD	2					
39	2FB–F7446–00	PLATE 2	1					
40	92012–06020	BOLT, BUTTON HEAD	2					
41	92902–06600	WASHER, PLATE	2					
42	20P–F7431–00	FOOTREST, REAR 1	1					
43	20P–F7441–00	FOOTREST, REAR 2	1					
44	90501–12743	SPRING, COMPRESSION	2					
45	93501–04805	BALL	2					
46	90240–08800	PIN, CLEVIS	2					
47	91401–20012	PIN, COTTER	2					
48	1CK–F741L–00	BRACKET 4	1					
49	1CK–F742L–00	BRACKET 5	1					
50	95812–08012	BOLT, FLANGE	4					
51	90387–08812	COLLAR	1					
52	20P–E4747–00	DAMPER, MUFFLER	1					

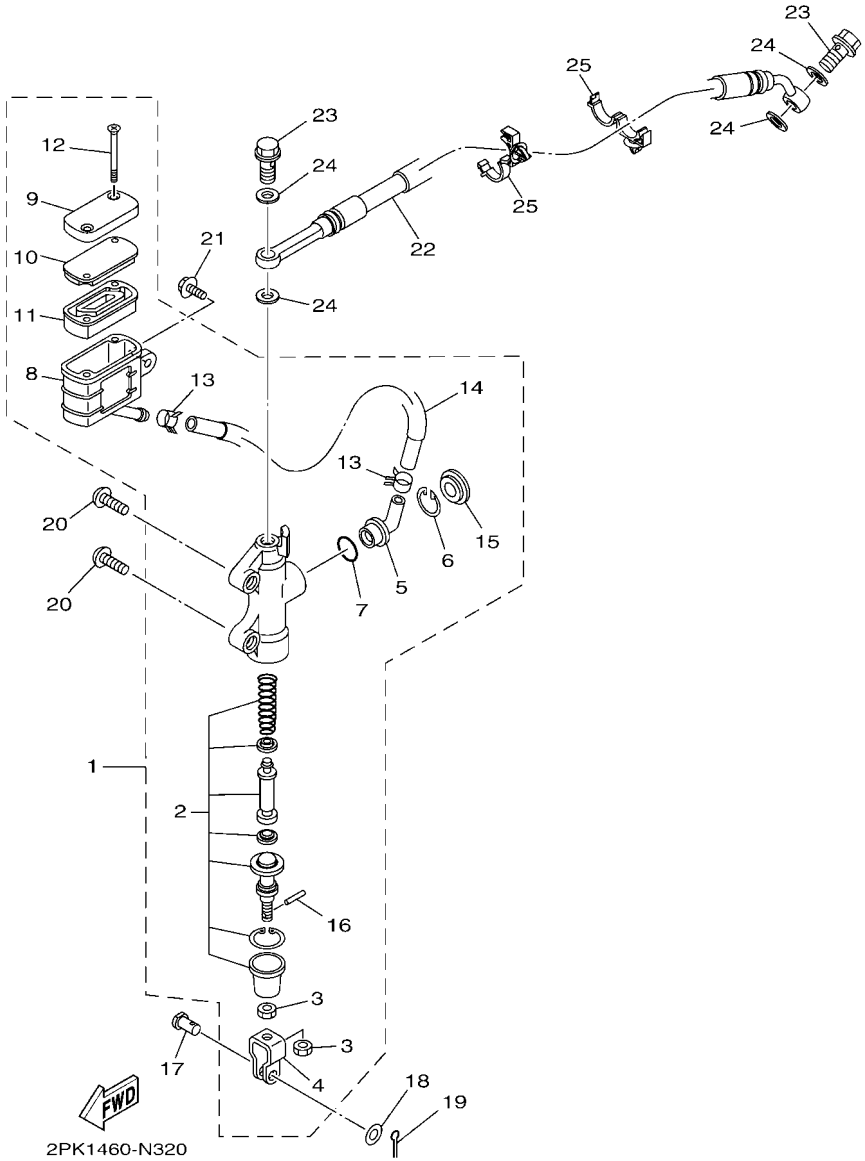

FIG. 32 REAR MASTER CYLINDER

REF. NO.	PART NO.	DESCRIPTION	2FB9					REMARKS
1	1CK–F583V–00	RR. MASTER CYLINDER ASSY.	1					
2	20P–W0042–00	.CYLINDER KIT, MASTER	1					
3	95301–08700	.NUT	2					
4	2YK–F7222–00	.JOINT	1					
5	4ML–F582A–50	.JOINT	1					
6	2VN–F5866–00	.CIRCLIP	1					
7	93210–15620	.O-RING	1					
8	20P–F5894–00	.TANK, RESERVOIR	1					
9	54C–F5852–00	.CAP, RESERVOIR	1					
10	20P–F585B–00	.PLATE, DIAPHRAGM	1					
11	20P–F5854–00	.DIAPHRAGM, RESERVOIR	1					
12	98707–04045	.SCREW, FLAT HEAD	2					
13	90467–12085	.CLIP	2					
14	1CK–F5895–00	.HOSE, RESERVOIR	1					
15	3FV–F589A–00	.COVER, DUST	1					
16	4TT–F7238–00	.PIN	1					
17	90240–08005	PIN, CLEVIS	1					
18	90201–08066	WASHER, PLATE	1					
19	91401–20012	PIN, COTTER	1					
20	92012–08020	BOLT, BUTTON HEAD	2					
21	90119–06137	BOLT, WITH WASHER	1					
22	2FB–F5873–00	HOSE, BRAKE 2	1					
23	90401–10820	BOLT, UNION	2					
24	90201–10118	WASHER, PLATE	4					
25	90464–17003	CLAMP	2					

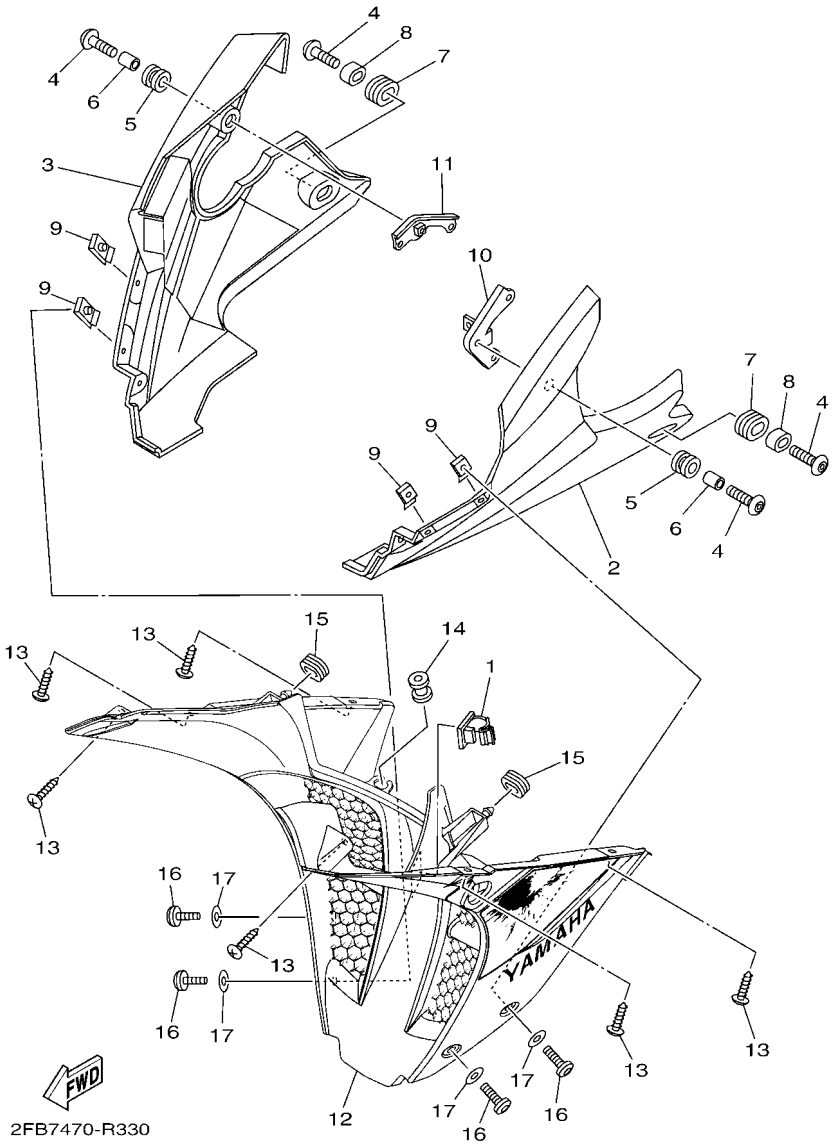

FIG. 33 LEG SHIELD

REF. NO.	PART NO.	DESCRIPTION	2FB9					REMARKS
1	90464–05802	CLAMP	1					
2	20P–F8385–10	COVER, UNDER	1					
3	20P–F8395–11	COVER, UNDER 2	1					
4	90111–06117	BOLT,HEX. SOCKET BUTTON	4					
5	90480–14003	GROMMET	2					
6	90387–068C2	COLLAR	2					
7	90480–01811	GROMMET	2					
8	20P–F1749–00	COLLAR	2					
9	90183–050A7	NUT, SPRING	4					
10	54C–F831U–00	STAY, SIDE 1	1					
11	20P–F832U–01	STAY, SIDE 1	1					
12	1CK–XF83D–30–P1	PANEL, INNER 3	1					UR FOR BWC1
	1CK–XF83D–40–P7	PANEL, INNER 3	1					UR FOR YRC2
13	97707–50012	SCREW, TRUSS HEAD TAPPING	6					
14	20P–F1773–00	GROMMET	1					
15	90480–01559	GROMMET	2					
16	90111–05003	BOLT,HEX. SOCKET BUTTON	4					
17	90202–05180	WASHER, PLATE	4					

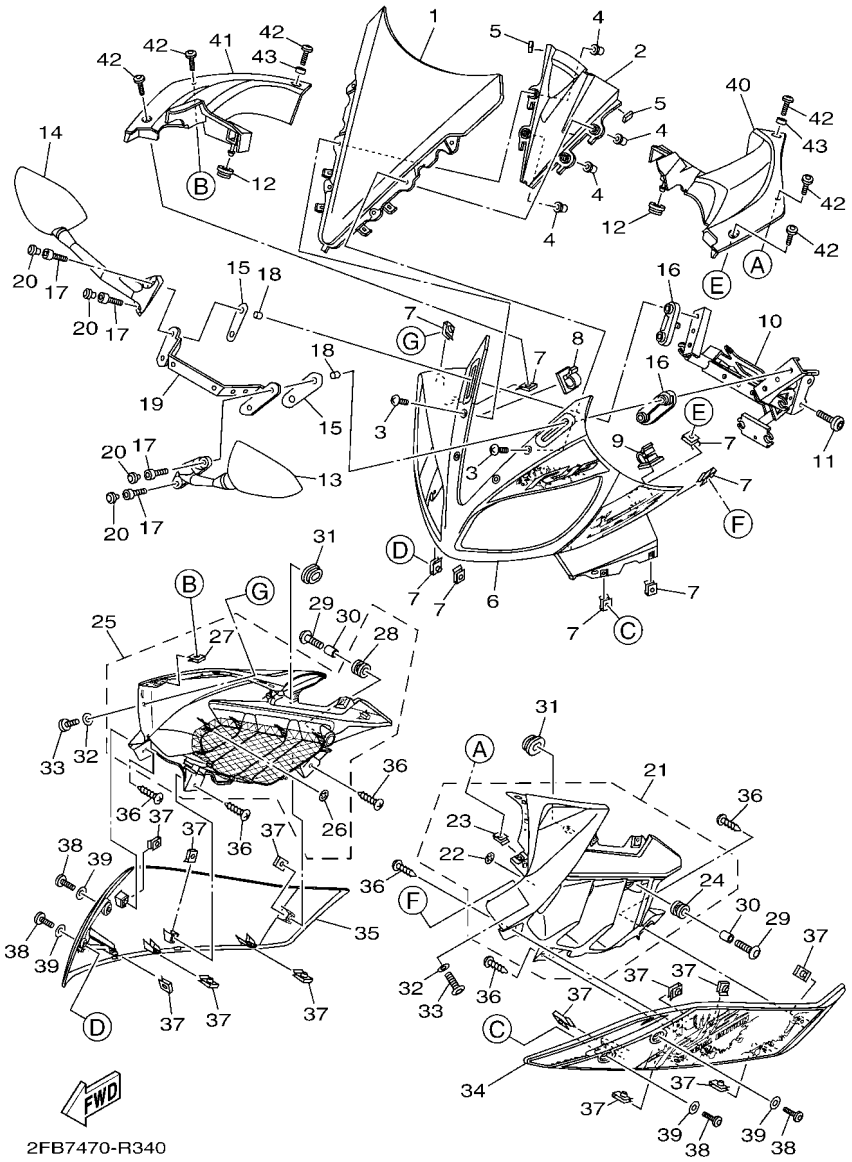

FIG. 34 WINDSHIELD

REF. NO.	PART NO.	DESCRIPTION	2FB9					REMARKS
1	1CK–F8381–00	WINDSHIELD	1					
2	20P–F836R–00	PANEL, INNER 5	1					
3	90150–05024	SCREW, ROUND HEAD	4					
4	90179–05804	NUT	4					
5	90520–02810	DAMPER, PLATE	2					
6	2FB–XF835–70–P7	BODY, FRONT UPPER 1	1					UR MNM3 FOR BWC1
	2FB–XF835–80–P7	BODY, FRONT UPPER 1	1					UR MNM3 FOR YRC2
7	90183–050A7	NUT, SPRING	8					
8	90464–20815	CLAMP	1					
9	90464–05802	CLAMP	1					
10	2FB–F8356–00	STAY 1	1					
11	90111–08836	BOLT,HEX. SOCKET BUTTON	2					
12	90480–01558	GROMMET	2					
13	2PB–F6280–01	REAR VIEW MIRROR ASSY (LEFT)	1					
14	2PB–F6290–01	REAR VIEW MIRROR ASSY (RIGHT)	1					
15	20P–F8483–00	PLATE, RUBBER 1	2					
16	20P–F8484–00	PLATE, RUBBER 2	2					
17	91317–06025	BOLT,HEX.SOCKET HEAD	4					
18	90387–068C2	COLLAR	4					
19	20P–F1685–00	BRACKET, LICENSE	1					
20	20P–F3469–00	CAP, BOLT	4					
21	1CK–XF11E–00–P6	COVER 7	1					MNM3
22	90183–05067	.NUT, SPRING	9					
23	90183–050A7	.NUT, SPRING	1					
24	90480–14003	.GROMMET	1					
25	1CK–XF11F–00–P6	COVER 8	1					MNM3
26	90183–05067	.NUT, SPRING	9					

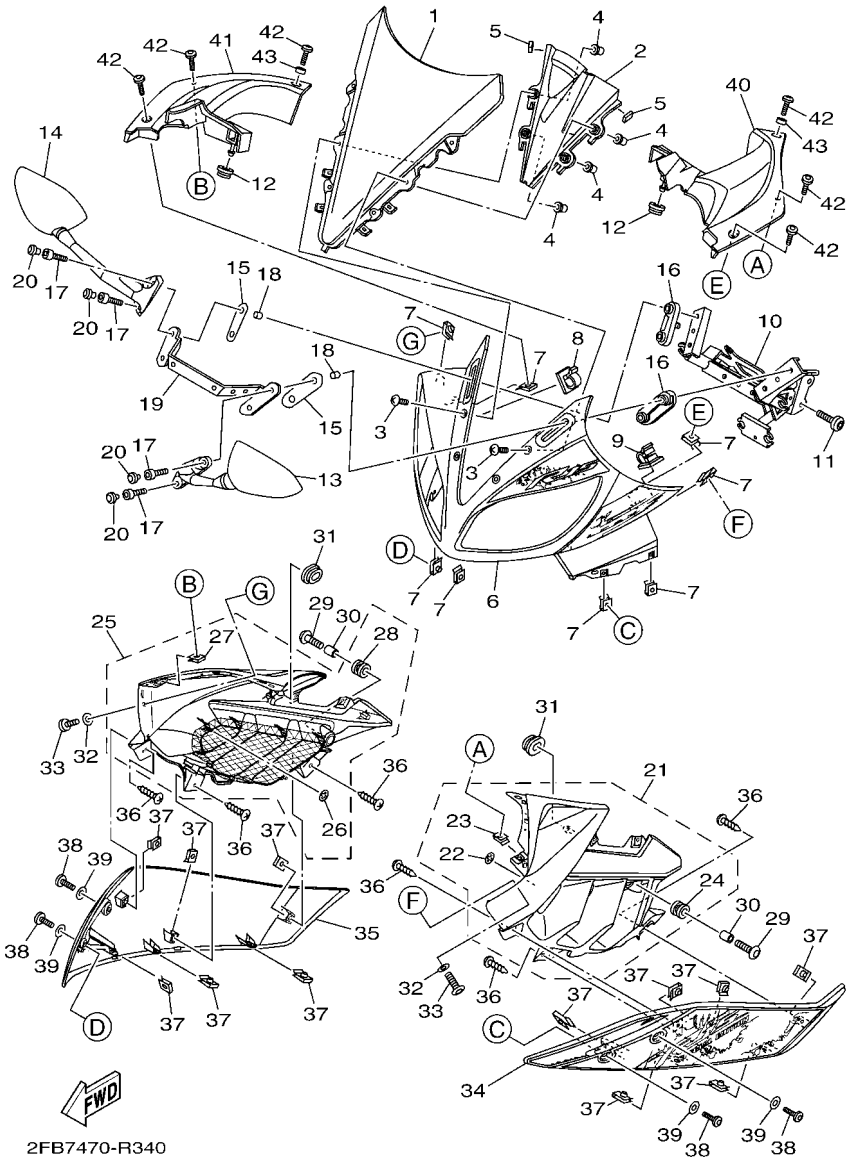

FIG. 34 WINDSHIELD

REF. NO.	PART NO.	DESCRIPTION	2FB9					REMARKS
27	90183–050A7	.NUT, SPRING	1					
28	90480–14003	.GROMMET	1					
29	90111–06117	BOLT,HEX. SOCKET BUTTON	2					
30	90387–068C2	COLLAR	2					
31	90480–01558	GROMMET	2					
32	90202–05180	WASHER, PLATE	2					
33	90111–05003	BOLT,HEX. SOCKET BUTTON	2					
34	2FB–XF836–70–P3	PANEL COMP 1	1					UR FOR BWC1
	2FB–XF836–80–P9	PANEL COMP 1	1					UR FOR YRC2
35	2FB–XF83G–70–P3	PANEL COMP 2	1					UR FOR BWC1
	2FB–XF83G–80–P9	PANEL COMP 2	1					UR FOR YRC2
36	97707–50012	SCREW, TRUSS HEAD TAPPING	6					
37	90183–05818	NUT, SPRING	12					
38	90111–05003	BOLT,HEX. SOCKET BUTTON	4					
39	90202–05180	WASHER, PLATE	4					
40	20P–F837L–00	PANEL, CONSOLE 1	1					
41	20P–F837M–00	PANEL, CONSOLE 2	1					
42	90111–05002	BOLT,HEX. SOCKET BUTTON	6					
43	90387–068C4	COLLAR	2					

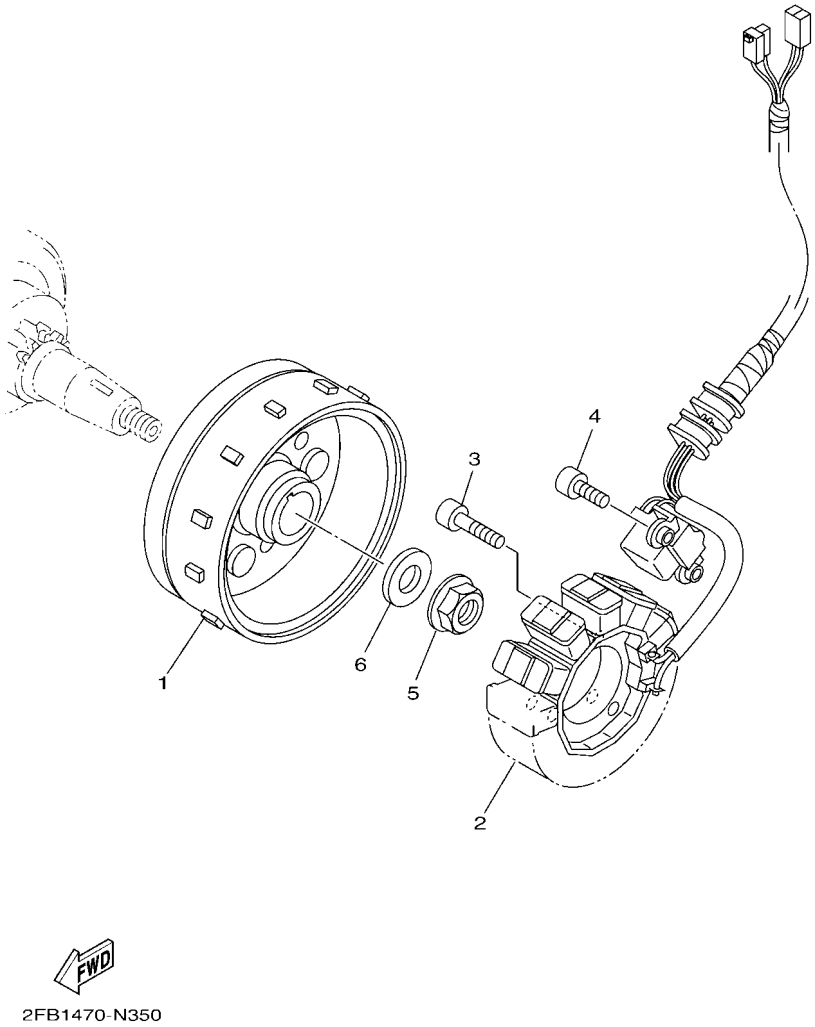

FIG. 35 GENERATOR

REF. NO.	PART NO.	DESCRIPTION	2FB9					REMARKS
1	2FB–H1450–00	ROTOR ASSY	1					
2	2FB–H1410–00	STATOR ASSY	1					
3	91312–06025	BOLT, HEXAGON SOCKET HEAD	3					
4	91312–06016	BOLT	2					
5	95702–12500	NUT, FLANGE	1					
6	90201–12019	WASHER, PLATE	1					

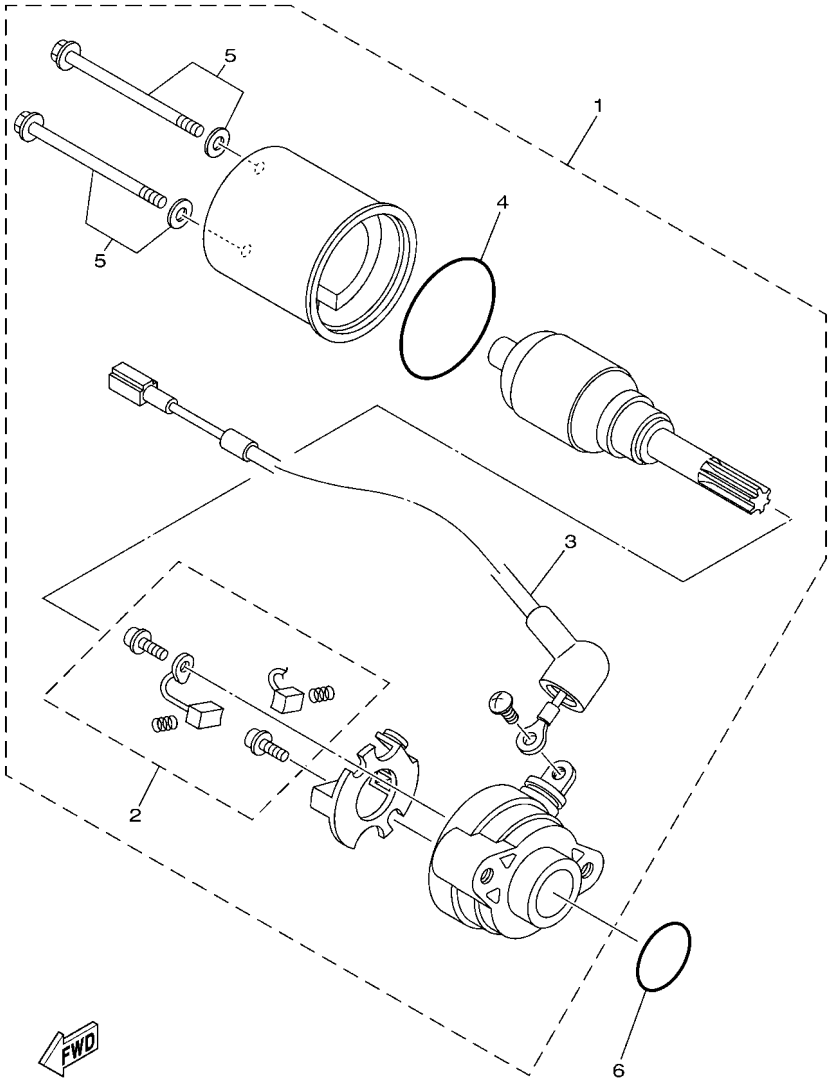

3C11460-F330

FIG. 36 STARTING MOTOR

REF. NO.	PART NO.	DESCRIPTION	2FB9					REMARKS
1	38B–H1800–01	STARTING MOTOR ASSY	1					
2	3AY–H1801–00	.BRUSH SET	1					
3	5D7–8183G–00	.CORD COMP.	1					
4	1S7–H1861–00	.GASKET	1					
5	3AY–H1828–00	.SCREW 2	2					
6	93210–26810	O-RING	1					

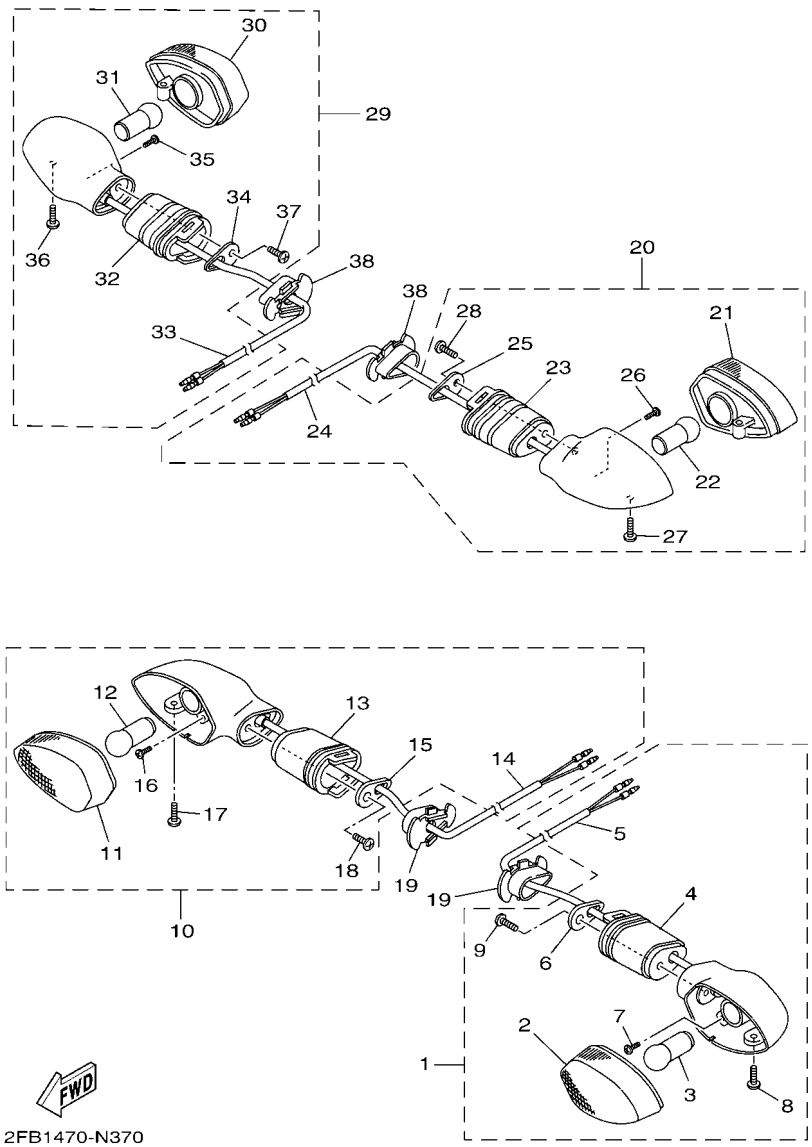

FIG. 37 FLASHER LIGHT

REF. NO.	PART NO.	DESCRIPTION	2FB9					REMARKS
1	2FB–H3310–00	FRONT FLASHER LIGHT ASSY 1	1					
2	54B–H331A–00	.LENS COMP 1	1					
3	2FB–H3311–00	.BULB, FLASHER (12V-10W)	1					
4	20P–H3318–00	.STAY, FLASHER 1	1					
5	1CK–H331E–00	.CORD ASSY	1					
6	20P–H3618–00	.PLATE	1					
7	20P–H213A–00	.SCREW, FITTING	1					
8	20P–H3333–00	.SCREW, LENS FITTING	1					
9	20P–H2133–00	.SCREW, FITTING	1					
10	2FB–H3320–00	FRONT FLASHER LIGHT ASSY 2	1					
11	54B–H332A–00	.LENS COMP 2	1					
12	2FB–H3311–00	.BULB, FLASHER (12V-10W)	1					
13	20P–H3318–00	.STAY, FLASHER 1	1					
14	1CK–H332E–00	.CORD ASSY	1					
15	20P–H3618–00	.PLATE	1					
16	20P–H213A–00	.SCREW, FITTING	1					
17	20P–H3333–00	.SCREW, LENS FITTING	1					
18	20P–H2133–00	.SCREW, FITTING	1					
19	5YY–H3318–10	STAY, FLASHER 1	2					
20	2FB–H3330–00	REAR FLASHER LIGHT ASSY 1	1					
21	54B–H333A–00	.LENS COMP 1	1					
22	2FB–H3311–00	.BULB, FLASHER (12V-10W)	1					
23	20P–H3318–10	.STAY, FLASHER 1	1					
24	1CK–H333E–00	.CORD ASSY	1					
25	20P–H3618–00	.PLATE	1					
26	20P–H213A–00	.SCREW, FITTING	1					
27	20P–H3333–00	.SCREW, LENS FITTING	1					

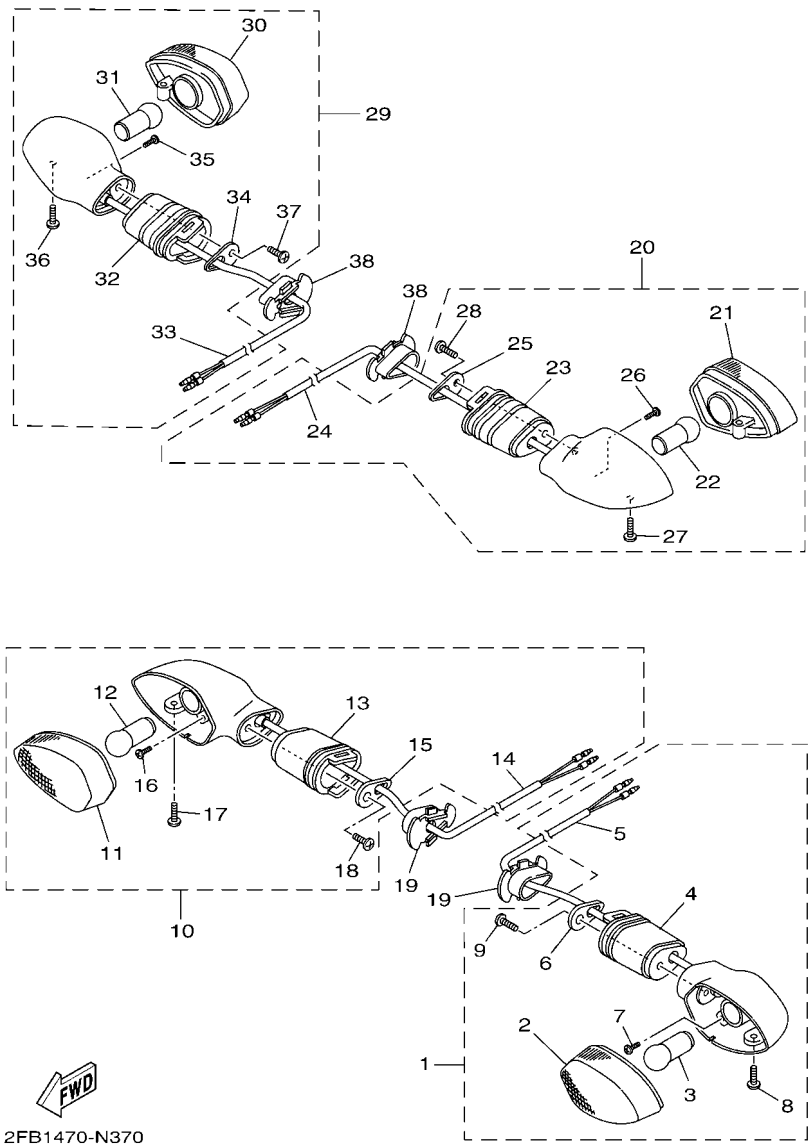

FIG. 37 FLASHER LIGHT

REF. NO.	PART NO.	DESCRIPTION	2FB9					REMARKS
28	20P–H2133–00	.SCREW, FITTING	1					
29	2FB–H3340–00	REAR FLASHER LIGHT ASSY 2	1					
30	54B–H334A–00	.LENS COMP 2	1					
31	2FB–H3311–00	.BULB, FLASHER (12V-10W)	1					
32	20P–H3318–10	.STAY, FLASHER 1	1					
33	1CK–H334E–00	.CORD ASSY	1					
34	20P–H3618–00	.PLATE	1					
35	20P–H213A–00	.SCREW, FITTING	1					
36	20P–H3333–00	.SCREW, LENS FITTING	1					
37	20P–H2133–00	.SCREW, FITTING	1					
38	5YY–H3318–10	STAY, FLASHER 1	2					

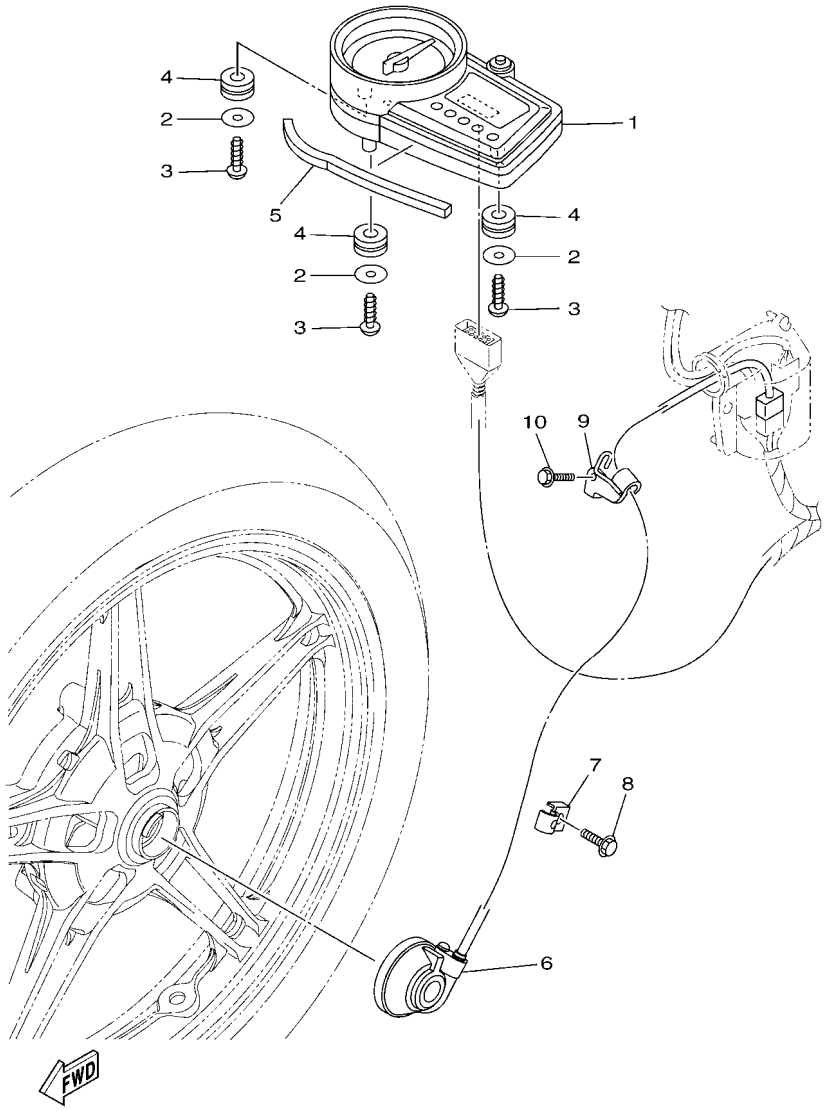

FIG. 38 METER

REF. NO.	PART NO.	DESCRIPTION	2FB9					REMARKS
1	2FB–H3500–00	METER ASSY	1					
2	90201–05036	WASHER, PLATE	3					
3	97707–50016	SCREW, TRUSS HEAD TAPPING	3					
4	90480–14816	GROMMET	3					
5	20P–H3592–00	DAMPER	1					
6	1CK–H3755–03	SENSOR, SPEED	1					
7	1CK–H3595–00	CLAMP	1					
8	95022–06012	BOLT, FLANGE	1					
9	1CK–H3596–00	CLAMP	1					
10	95022–06014	BOLT, FLANGE	1					

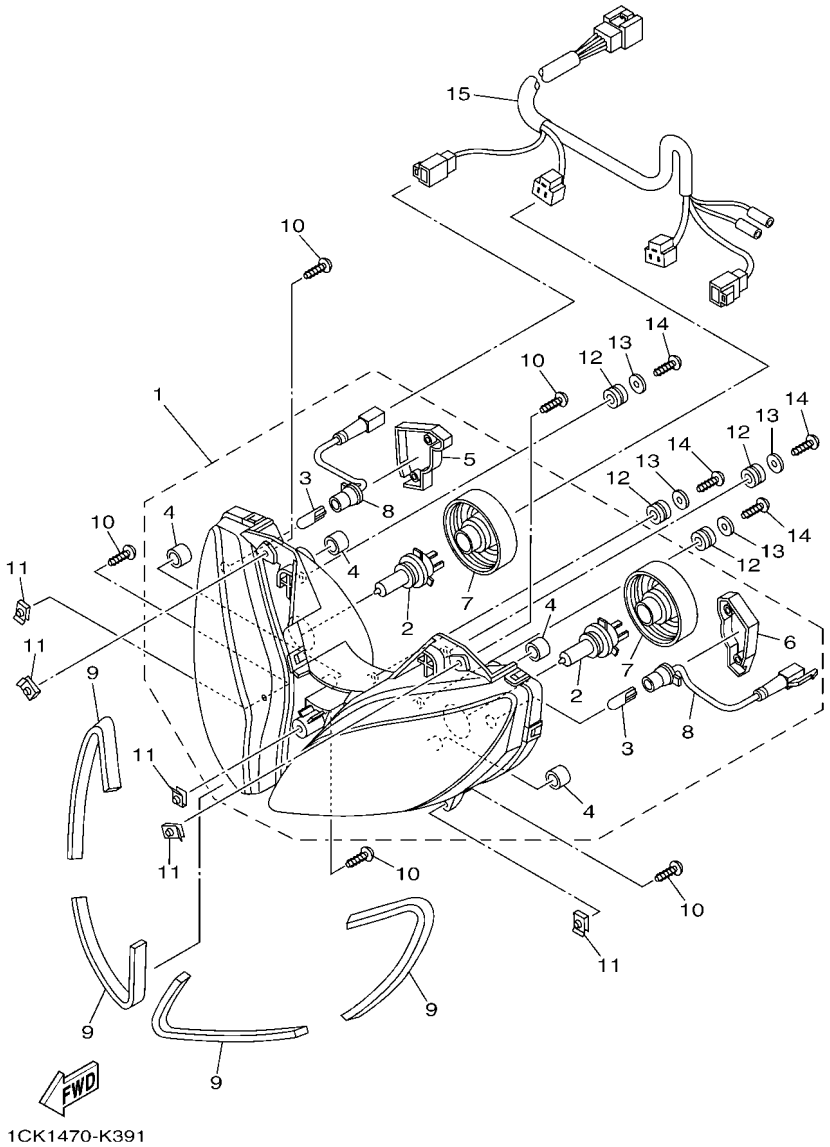

FIG. 39 HEADLIGHT

REF. NO.	PART NO.	DESCRIPTION	2FB9					REMARKS
1	20P–H4300–03	HEADLIGHT ASSY	1					
2	20P–H4314–00	.BULB (12V-35/35W)	2					
3	20P–H4347–00	.BULB (12V-5W)	2					
4	20P–H4378–00	.CAP	4					
5	20P–H4544–11	.COVER	1					
6	20P–H4544–01	.COVER	1					
7	20P–H4397–00	.COVER, SOCKET	2					
8	20P–H4312–01	.CORD ASSY	2					
9	20P–H4345–00	DAMPER, HEADLIGHT	4					
10	97707–50016	SCREW, TRUSS HEAD TAPPING	5					
11	90183–05818	NUT, SPRING	5					
12	90480–14229	GROMMET	4					
13	90201–05036	WASHER, PLATE	4					
14	97707–50016	SCREW, TRUSS HEAD TAPPING	4					
15	1CK–H4359–00	CORD, HEADLIGHT	1					

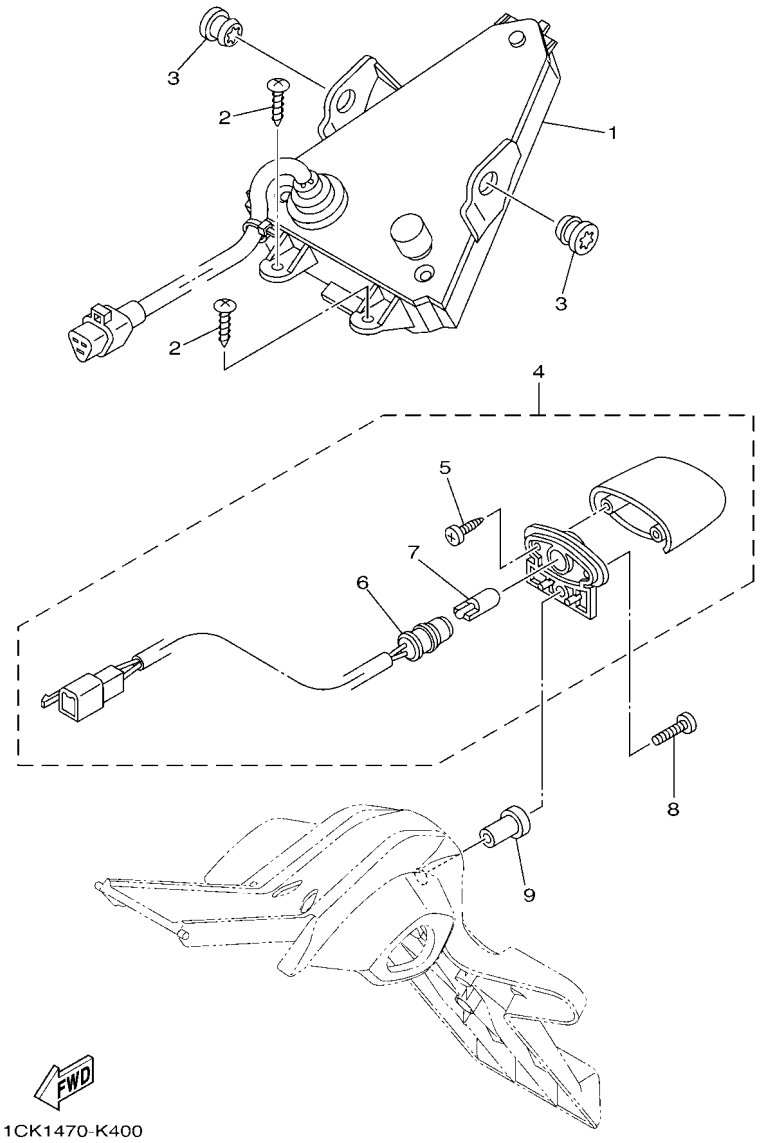

FIG. 40 TAILLIGHT

REF. NO.	PART NO.	DESCRIPTION	2FB9					REMARKS
1	1CK–H4710–00	TAILLIGHT UNIT ASSY	1					
2	97707–50014	SCREW, TRUSS HEAD TAPPING	2					
3	90480–13818	GROMMET	2					
4	1CK–H4740–00	LICENCE LIGHT ASSY	1					
5	1CK–H4726–00	.SCREW	2					
6	1CK–H4547–00	.CORD, LICENCE LIGHT	1					
7	1CK–H4744–00	.BULB (12V-5W)	1					
8	98907–04020	SCREW, BIND	1					
9	90179–04003	NUT	1					

FIG. 41 HANDLE SWITCH & LEVER

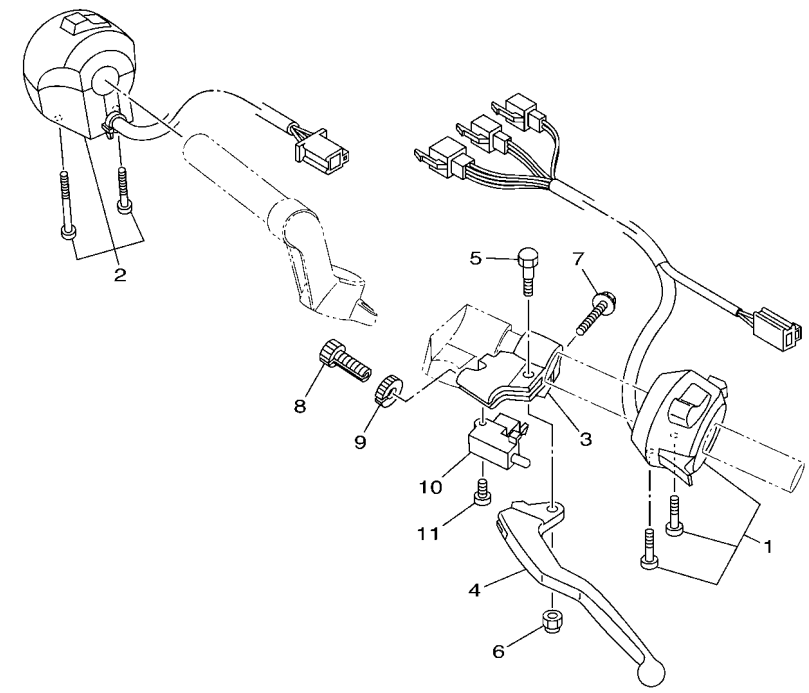

2PB2700-M410

REF. NO.	PART NO.	DESCRIPTION	2FB9					REMARKS
1	20P–H3972–01	SWITCH, HANDLE 4	1					
2	2PB–H3975–00	SWITCH, HANDLE 2	1					
3	20P–H2911–00	HOLDER, LEVER 1	1					
4	20P–H3912–00	LEVER 1	1					
5	20P–H3945–00	BOLT, LEVER	1					
6	20P–H331B–00	NUT, SPRING	1					
7	20P–H3546–00	BOLT	1					
8	20P–H3951–00	BOLT, CABLE ADJUSTING	1					
9	20P–H3927–00	NUT, ADJUSTING	1					
10	3YX–82917–01	SWITCH	1					
11	98707–03020	SCREW, FLAT HEAD	1					

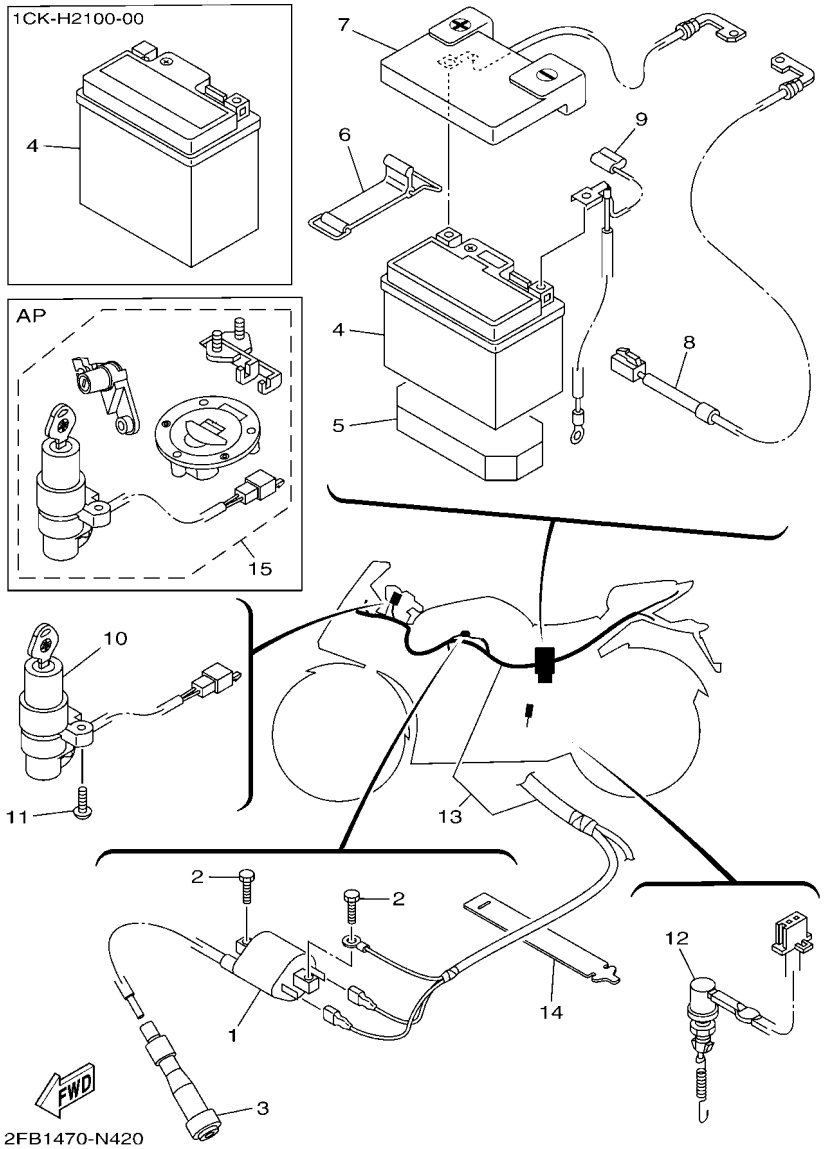

FIG. 42 ELECTRICAL 1

REF. NO.	PART NO.	DESCRIPTION	2FB9					REMARKS
1	1P5–H2310–10	IGNITION COIL ASSY	1					
2	97002–06016	BOLT, HEXAGON	2					
3	20P–H2370–02	PLUG CAP ASSY	1					
4	1CK–H2100–00	BATTERY (EXIDE ETZ-5 MC VRLA)	1					UR
	20P–H2100–00	BATTERY ASSY (GS YTZ 5S MF)	1					UR
5	1CK–H2121–00	PAD, BATTERY	1					
6	20P–F811G–00	BAND	1					
7	1CK–H2115–00	WIRE, PLUS LEAD	1					
8	1CK–H2509–00	WIRE, SUB LEAD	1					
9	1CK–H2116–00	WIRE, MINUS LEAD	1					
10	54C–H2501–00	MAIN SWITCH STEERING LOCK	1					
11	90149–06118	SCREW	2					
12	1CK–H2530–00	STOP SWITCH ASSY	1					
13	2FB–H2590–00	WIRE HARNESS ASSY	1					
14	2FB–F179E–00	BAND	1					
15	2FB–XH250–00	MAIN SW. STRG. LOCK SUB ASSY	1					AP

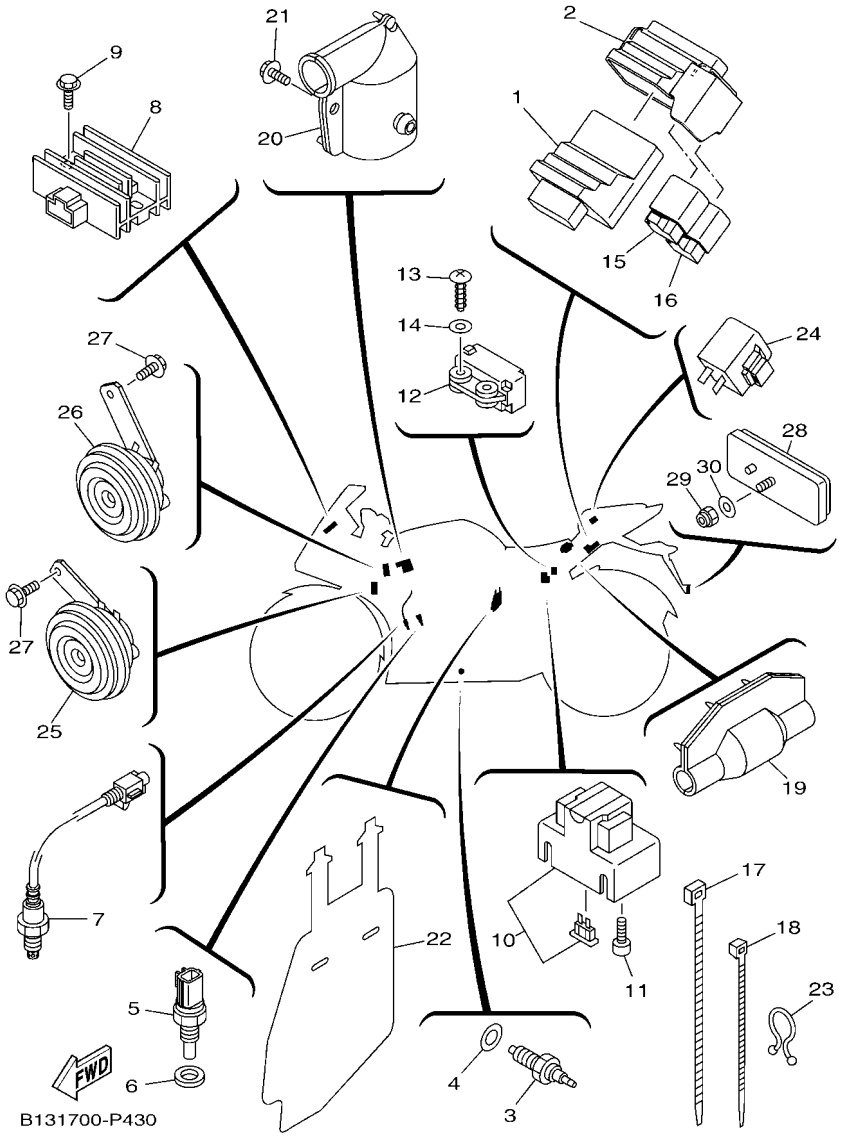

FIG. 43 ELECTRICAL 2

REF. NO.	PART NO.	DESCRIPTION	2FB9					REMARKS
1	2FB–H591A–01	ENGINE CONTROL UNIT ASSY	1					
2	2FB–H5546–00	BAND	1					
3	21C–H2540–00	NEUTRAL SWITCH ASSY	1					
4	90430–10148	GASKET	1					
5	52B–H3591–00	THERMO UNIT	1					
6	90430–10802	GASKET	1					
7	1DB–H592A–10	SENSOR, OXYGEN	1					
8	54B–H1960–01	RECTIFIER & REGULATOR ASSY	1					
9	95802–06020	BOLT, FLANGE	2					
10	1CK–H1940–01	STARTER RELAY ASSY	1					
11	91312–05008	BOLT	2					
12	10B–82576–00	SENSOR, LEAN ANGLE	1					
13	97702–40012	SCREW, TAPPING	2					
14	90201–047A2	WASHER, PLATE	2					
15	2FB–H1950–00	RELAY ASSY	1					
16	1CK–H1950–01	RELAY ASSY	1					
17	90464–50800	CLAMP	3					
18	90464–36800	CLAMP	6					
19	1CK–H2599–01	COVER, CONNECTER	1					
20	20P–H246B–02	COVER 1	1					
21	90119–06054	BOLT, WITH WASHER	1					
22	1CK–H2589–01	PROTECTER, WIRE HARNESS	1					
23	90464–20822	CLAMP	2					
24	5TS–H3350–01	FLASHER RELAY ASSY	1					
25	1CK–H3371–10	HORN	1					
26	1CK–H3371–00	HORN	1					
27	95822–06012	BOLT, FLANGE	2					

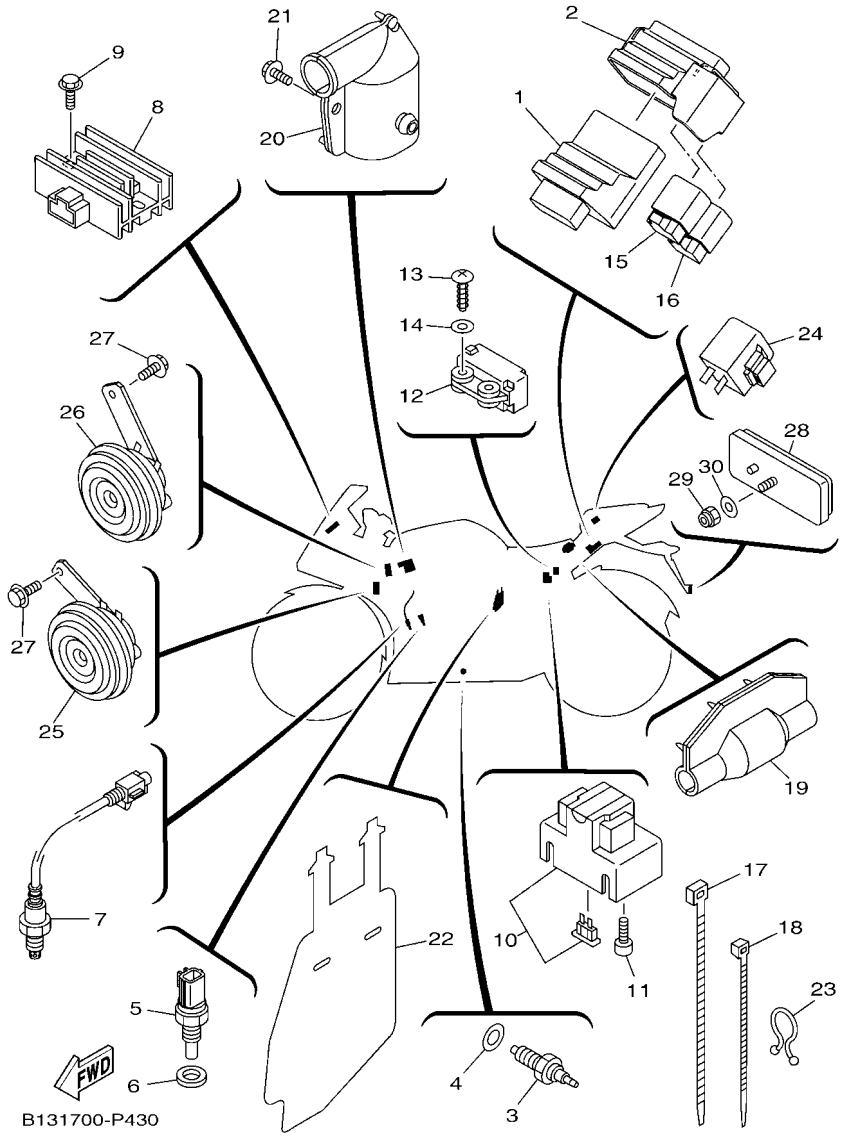

FIG. 43 ELECTRICAL 2

REF. NO.	PART NO.	DESCRIPTION	2FB9					REMARKS
28	5US–H5110–01	REFLECTOR ASSY	1					
29	95607–05100	NUT, U	1					
30	90201–05725	WASHER, PLATE	1					

PART NO.	REF. NO.
1WG–12118–00	3 – 5
2DM–12159–00	3 – 9
	3 – 12
5MT–25398–00	25 – 7
	27 – 15
5MT–25398–10	25 – 7
	27 – 15
5MT–25398–20	25 – 7
	27 – 15
36Y–2589H–00	30 – 6
5D7–8183G–00	36 – 3
10B–82576–00	43 – 12
3YX–82917–01	41 – 10
2FB–E1102–00	1 – 1
38B–E111F–00	4 – 8
2FB–E1166–10	8 – 29
1CK–E1181–00	1 – 13
38B–E1185–01	5 – 4
2FB–E1191–00	1 – 6
38B–E1193–00	1 – 9
38B–E1196–00	5 – 5
1PA–E1311–00	1 – 17
38B–E1351–00	1 – 18
1CK–E1400–09	2 – 1
2FB–E1454–00	2 – 14
54B–E1476–00	2 – 12
21C–E1496–20	2 – 9
21C–E1531–01	2 – 15
38B–E1536–10	2 – 8
1PA–E1603–00	2 – 7
3C1–E1631–11	2 – 4
38B–E1633–00	2 – 5
38B–E1951–00	5 – 8
38B–E1952–01	5 – 9
5YP–E2111–00	3 – 1
38B–E2113–00	3 – 4
1PA–E2117–00	3 – 6
38B–E2119–00	3 – 3
5YP–E2121–00	3 – 2
38B–E2126–00	3 – 7
38B–E2151–10	3 – 8
1CK–E2156–00	3 – 14
2FB–E2157–00	4 – 7
38B–E2161–10	3 – 11
38B–E2170–00	4 – 1
38B–E2210–00	4 – 16
1CK–E2213–00	4 – 17
38B–E2231–00	4 – 11

PART NO.	REF. NO.
38B–E2241–00	4 – 12
38B–E2256–00	4 – 15
2ND–E2280–00	4 – 5
2FB–E2288–00	4 – 6
BB7–E2405–01	6 – 5
BB7–E240A–01	6 – 4
1CK–E2411–00	6 – 1
38B–E2413–00	6 – 2
38B–E2422–00	5 – 1
38B–E2428–00	5 – 3
38B–E2443–00	5 – 13
38B–E2450–01	5 – 7
BB7–E2462–00	6 – 8
20P–E2467–01	6 – 15
1CK–E246A–00	6 – 14
20P–E2481–00	6 – 16
20P–E2482–00	6 – 18
BB7–E2671–00	6 – 7
BB7–E2675–00	6 – 6
38B–E3300–01	7 – 1
38B–E3324–00	7 – 8
38B–E3327–00	7 – 13
21C–E3362–00	2 – 13
38B–E3411–00	7 – 4
38B–E3440–00	7 – 7
38B–E3447–00	7 – 9
2FB–E3556–00	8 – 2
2FB–E3557–00	8 – 8
2FB–E3585–00	8 – 1
2FB–E3635–00	8 – 3
2FB–E3750–00	8 – 11
2FB–E3767–00	8 – 10
5D7–E3770–00	8 – 6
2FB–E3907–10	23 – 18
2FB–E3971–01	23 – 22
5CA–E4147–00	8 – 7
20P–E4411–00	8 – 13
20P–E4412–00	8 – 14
20P–E4419–00	8 – 23
2FB–E441J–00	8 – 24
20P–E443E–00	8 – 19
2FB–E443H–00	8 – 33
20P–E4450–00	8 – 15
3C1–E4452–00	8 – 17
20P–E4453–01	8 – 16
20P–E4485–00	8 – 21
21C–E4613–00	9 – 12
2FB–E4703–00	9 – 1

PART NO.	REF. NO.
1CK–E4718–00	9 – 2
1CK–E4728–00	9 – 3
1CK–E4728–00	31 – 52
1CK–E4799–00	9 – 8
2FB–E5113–00	11 – 9
2FB–E5150–00	10 – 1
38B–E5351–00	7 – 3
38B–E5362–00	11 – 17
2FB–E5411–00	11 – 1
38B–E5418–00	11 – 10
1CK–E5421–00	11 – 12
38B–E5441–00	4 – 18
2FB–E5451–00	11 – 2
2FB–E5461–00	11 – 13
1CK–E5514–00	12 – 1
38B–E5521–00	12 – 2
38B–E5524–10	12 – 5
21C–E5580–10	12 – 8
38B–E5598–00	4 – 14
38B–E6111–00	13 – 1
21C–E6135–10	13 – 18
54B–E6144–00	13 – 16
1CK–E6150–00	13 – 5
21C–E6154–00	13 – 6
38B–E6193–00	13 – 2
54B–E6321–00	13 – 8
21C–E6324–00	13 – 10
21C–E6331–00	13 – 9
21C–E6333–00	13 – 12
21C–E6337–00	13 – 13
3C1–E6344–00	13 – 17
1CK–E6345–00	13 – 21
54B–E6351–00	13 – 11
21C–E6356–01	13 – 15
38B–E6357–01	13 – 22
21C–E6358–00	13 – 14
21C–E6371–00	13 – 7
38B–E6380–01	13 – 20
38B–E7211–00	14 – 7
38B–E7221–00	14 – 15
38B–E7231–00	14 – 13
38B–E7241–00	14 – 12
38B–E7251–00	14 – 9
38B–E7258–00	14 – 8
38B–E7261–00	14 – 14
1CK–E7402–00	14 – 6
38B–E7410–00	14 – 1
4LS–E7456–00	14 – 22

PART NO.	REF. NO.
38B–E7471–00	14 – 4
38B–E8101–00	16 – 4
20P–E8112–01	16 – 14
20P–E8113–00	16 – 10
	31 – 33
20P–E8115–01	16 – 11
21C–E8140–00	16 – 1
38B–E8337–00	16 – 3
38B–E8511–00	15 – 2
38B–E8512–00	15 – 3
38B–E8513–00	15 – 4
38B–E8531–00	15 – 5
2FB–E8540–00	15 – 1
2FB–F1110–00	17 – 1
1CK–F117G–00	17 – 9
1CK–F117K–00	24 – 11
20P–F1338–00	17 – 8
1CK–F144G–00	31 – 36
1CK–F1511–00–3Y	18 – 1
1CK–F1511–00–7X	18 – 1
1CK–F160E–00	18 – 18
1CK–F1611–00	18 – 7
1CK–F1629–00	18 – 14
1CK–F1640–00	18 – 13
1CK–F1644–00	20 – 27
1CK–F1645–00	20 – 28
1CK–F164F–00	20 – 23
1CK–F1650–00	20 – 21
21C–F1681–00	18 – 9
20P–F1685–00	34 – 19
1CK–F1711–00	19 – 1
1CK–F171X–00–P7	19 – 24
1CK–F1721–00	19 – 2
20P–F1749–00	33 – 8
20P–F1773–00	33 – 14
2FB–F179E–00	42 – 14
20P–F1823–00	19 – 15
20P–F1828–00	19 – 11
2FB–F1871–00	19 – 8
20P–F1875–00	19 – 10
1CK–F2110–00	20 – 1
1CK–F2128–00	20 – 4
20P–F2141–00	20 – 5
1CK–F2147–00	20 – 30
1CK–F2151–00	20 – 7
1CK–F217A–00	20 – 10
2PK–F217F–00	20 – 14
20P–F2184–00	20 – 3

PART NO.	REF. NO.
1CK–F219X–00	20 – 20
1CK–F2210–00	20 – 33
1CK–F2311–00	20 – 17
20P–F2327–00	17 – 7
1CK–F3100–01	22 – 1
1CK–F3102–00	22 – 2
1CK–F3103–00	22 – 21
20P–F3110–00	22 – 8
	22 – 27
20P–F3111–00	22 – 18
	22 – 37
20P–F3114–00	22 – 19
	22 – 38
20P–F3118–00	22 – 17
	22 – 36
20P–F3125–00	22 – 4
	22 – 23
1CK–F3126–00	22 – 3
1CK–F3136–00	22 – 22
20P–F3141–00	22 – 15
	22 – 34
20P–F3144–00	22 – 7
	22 – 26
20P–F3145–00	22 – 5
	22 – 24
20P–F3149–00	22 – 16
	22 – 35
20P–F3151–00	22 – 10
	22 – 29
20P–F3156–10	22 – 6
	22 – 25
20P–F3157–00	22 – 11
	22 – 30
21C–F3158–00	22 – 13
	22 – 32
20P–F3170–00	22 – 9
	22 – 28
20P–F3173–00	22 – 12
	22 – 31
21C–F3181–10	22 – 14
	22 – 33
20P–F3340–00	22 – 40
20P–F3346–00	22 – 41
4FP–F3411–20	21 – 2
1KL–F3412–10	21 – 3
20P–F3416–00	21 – 5
20P–F3418–00	21 – 8
50P–F341E–10	21 – 4

PART NO.	REF. NO.
20P–F3435–00	21 – 9
5YY–F3462–00	22 – 43
20P–F3469–00	29 – 5
	34 – 20
1CK–F3738–00	22 – 20
	22 – 39
2FB–F3873–00	21 – 1
2FB–F3875–00	22 – 42
20P–F411F–00	23 – 6
5YY–F413B–00	23 – 4
2GS–F414G–00	23 – 20
1CK–F416B–10	23 – 2
2FB–F4170–00	23 – 26
2FB–F4180–00	23 – 29
20P–F4188–00	23 – 14
20P–F4191–00	23 – 5
2FB–F4254–30	23 – 3
2FB–F4254–40	23 – 3
20P–F4312–00	23 – 23
2FB–F4313–00	23 – 31
2FB–F4314–00	23 – 32
2FB–F4315–00	23 – 33
2FB–F4491–00	23 – 19
1CK–F4710–00	24 – 1
1PM–F4741–00	24 – 2
4LS–F4741–00	24 – 5
1CK–F4750–00	24 – 4
21C–F4763–00	24 – 6
20P–F4780–00	24 – 7
1CK–F478E–00	24 – 9
2FB–F483H–00	23 – 36
1CK–F510C–00	25 – 2
1CK–F5168–00–33	25 – 1
1CK–F5181–00	25 – 9
1CK–F5186–00	25 – 8
1CK–F530S–00	27 – 2
21C–F531B–31	25 – 11
	27 – 26
21C–F531B–50	25 – 11
	27 – 26
1CK–F5338–00–33	27 – 1
54B–F5364–00	27 – 4
20P–F5366–00–33	27 – 6
1CK–F5377–00	27 – 9
1CK–F5381–00	27 – 16
1CK–F5383–00	27 – 18
1CK–F5386–00	27 – 17
1CK–F5388–00	27 – 21

PART NO.	REF. NO.
1CK–F5447–00	27 – 10
3C1–F5802–00	26 – 4
4S3–F5802–00	28 – 4
3GD–F5803–00	28 – 5
3C1–F5803–50	26 – 5
4S3–F5805–00	28 – 9
3C1–F5805–10	26 – 12
2FB–F580U–00	26 – 3
2FB–F580W–00	28 – 3
4ML–F582A–50	32 – 5
1CK–F582U–10	26 – 1
1CK–F582W–10	28 – 1
1CK–F583T–00	30 – 2
1CK–F583V–00	32 – 1
3C1–F5852–00	30 – 5
54C–F5852–00	32 – 9
20P–F5854–00	32 – 11
3RW–F5854–00	30 – 4
3C1–F5855–00	30 – 8
20P–F585B–00	32 – 10
2VN–F5866–00	32 – 6
3RW–F5867–00	30 – 7
20P–F5872–00	30 – 1
2FB–F5873–00	32 – 22
20P–F5876–00	30 – 19
1CK–F5886–00	30 – 17
20P–F5894–00	32 – 8
1CK–F5895–00	32 – 14
3FV–F589A–00	32 – 15
3SP–F5914–51	28 – 8
5YP–F5917–00	26 – 8
4S3–F5919–00	28 – 7
5P0–F5919–00	26 – 10
5YP–F5924–00	26 – 11
5YP–F5925–01	26 – 9
5YP–F5937–00	26 – 7
5YP–F5939–00	26 – 13
20P–F6121–00	29 – 1
20P–F6122–00	29 – 2
20P–F622F–00	29 – 11
20P–F622H–00	29 – 10
1CK–F6240–00	29 – 6
20P–F6241–00	29 – 7
20P–F6246–00	29 – 8
20P–F6257–00	29 – 9
2PB–F6280–01	34 – 13
2PB–F6290–01	34 – 14
2FB–F6311–00	29 – 13

PART NO.	REF. NO.
2FB–F6312–00	29 – 14
20P–F6315–00	29 – 15
20P–F6335–01	29 – 17
20P–F6372–00	29 – 18
1CK–F7211–00	31 – 32
2YK–F7222–00	32 – 4
4TT–F7238–00	32 – 16
2FB–F7311–00	31 – 1
20P–F7411–00	31 – 10
	31 – 24
1CK–F741L–00	31 – 48
1CK–F742L–00	31 – 49
20P–F7431–00	31 – 42
20P–F7435–00	31 – 14
	31 – 28
20P–F7441–00	31 – 43
20P–F7442–00	31 – 8
20P–F7443–00	31 – 22
2FB–F7445–00	31 – 19
2FB–F7446–00	31 – 39
20P–F7451–00	31 – 9
20P–F7461–00	31 – 23
1CK–F8100–20	17 – 10
20P–F811G–00	42 – 6
1CK–F8186–00	17 – 11
20P–F8284–00	17 – 5
54C–F831U–00	33 – 10
20P–F832U–01	33 – 11
2FB–F8356–00	34 – 10
20P–F836B–00	19 – 22
20P–F836R–00	34 – 2
20P–F837L–00	34 – 40
20P–F837M–00	34 – 41
1CK–F8381–00	34 – 1
20P–F8385–10	33 – 2
20P–F8395–11	33 – 3
20P–F8483–00	34 – 15
20P–F8484–00	34 – 16
2FB–H1410–00	35 – 2
2FB–H1450–00	35 – 1
38B–H1800–01	36 – 1
3AY–H1801–00	36 – 2
3AY–H1828–00	36 – 5
1S7–H1861–00	36 – 4
1CK–H1940–01	43 – 10
2FB–H1950–00	43 – 15
1CK–H1950–01	43 – 16
54B–H1960–01	43 – 8

PART NO.	REF. NO.
1CK–H2100–00	42 – 4
20P–H2100–00	42 – 4
20P–H2100–00	42 – 7
1CK–H2116–00	42 – 9
1CK–H2121–00	42 – 5
20P–H2133–00	37 – 9
	37 – 18
	37 – 28
	37 – 37
20P–H213A–00	37 – 7
	37 – 16
	37 – 26
	37 – 35
1P5–H2310–10	42 – 1
20P–H2370–02	42 – 3
20P–H246B–02	43 – 20
54C–H2501–00	42 – 10
1CK–H2509–00	42 – 8
1CK–H2530–00	42 – 12
21C–H2540–00	43 – 3
1CK–H2589–01	43 – 22
2FB–H2590–00	42 – 13
1CK–H2599–01	43 – 19
20P–H2911–00	41 – 3
2FB–H3310–00	37 – 1
2FB–H3311–00	37 – 3
	37 – 12
	37 – 22
	37 – 31
20P–H3318–00	37 – 4
	37 – 13
20P–H3318–10	37 – 23
	37 – 32
5YY–H3318–10	37 – 19
	37 – 38
54B–H331A–00	37 – 2
20P–H331B–00	41 – 6
1CK–H331E–00	37 – 5
2FB–H3320–00	37 – 10
54B–H332A–00	37 – 11
1CK–H332E–00	37 – 14
2FB–H3330–00	37 – 20
20P–H3333–00	37 – 8
	37 – 17
	37 – 27
	37 – 36
54B–H333A–00	37 – 21
1CK–H333E–00	37 – 24

PART NO.	REF. NO.
2FB–H3340–00	37 – 29
54B–H334A–00	37 – 30
1CK–H334E–00	37 – 33
5TS–H3350–01	43 – 24
1CK–H3371–00	43 – 26
1CK–H3371–10	43 – 25
2FB–H3500–00	38 – 1
20P–H3546–00	41 – 7
52B–H3591–00	43 – 5
20P–H3592–00	38 – 5
1CK–H3595–00	38 – 7
1CK–H3596–00	38 – 9
20P–H3618–00	37 – 6
	37 – 15
	37 – 25
	37 – 34
1CK–H3755–03	38 – 6
20P–H3912–00	41 – 4
38B–H3922–00	30 – 9
20P–H3927–00	41 – 9
5TS–H3936–01	30 – 20
20P–H3945–00	41 – 5
20P–H3951–00	41 – 8
20P–H3972–01	41 – 1
2PB–H3975–00	41 – 2
1CK–H3980–00	30 – 12
20P–H4300–03	39 – 1
20P–H4312–01	39 – 8
20P–H4314–00	39 – 2
20P–H4345–00	39 – 9
20P–H4347–00	39 – 3
1CK–H4359–00	39 – 15
20P–H4378–00	39 – 4
20P–H4397–00	39 – 7
20P–H4544–01	39 – 6
20P–H4544–11	39 – 5
1CK–H4547–00	40 – 6
1CK–H4710–00	40 – 1
1CK–H4726–00	40 – 5
1CK–H4740–00	40 – 4
1CK–H4744–00	40 – 7
5US–H5110–01	43 – 28
2FB–H5546–00	43 – 2
2FB–H591A–01	43 – 1
1DB–H592A–10	43 – 7
5P0–W0041–10	30 – 3
20P–W0042–00	32 – 2
4C9–W0048–00	26 – 6

PART NO.	REF. NO.
4S3–W0048–00	28 – 6
20P–WE811–00	16 – 9
2FB–WF461–00	23 – 15
1CK–WF47E–00	24 – 10
1CK–XF11E–00–P6	34 – 21
1CK–XF11F–00–P6	34 – 25
2FB–XF173–70–P6	19 – 16
2FB–XF173–80–P6	19 – 16
2FB–XF174–70–P6	19 – 17
2FB–XF174–80–P6	19 – 17
1CK–XF17C–70–P7	19 – 21
2FB–XF41A–30–P5	23 – 1
2FB–XF41A–40–P5	23 – 1
2FB–XF835–70–P7	34 – 6
2FB–XF835–80–P7	34 – 6
2FB–XF836–70–P3	34 – 34
2FB–XF836–80–P9	34 – 34
1CK–XF83D–30–P1	33 – 12
1CK–XF83D–40–P7	33 – 12
2FB–XF83G–70–P3	34 – 35
2FB–XF83G–80–P9	34 – 35
2FB–XH250–00	42 – 15
90101–08006	27 – 22
90105–06169	23 – 9
90105–08850	1 – 10
90105–10006	21 – 11
90105–10082	26 – 14
90105–10311	20 – 13
90105–10323	17 – 2
90105–106A7	31 – 3
90105–10857	17 – 3
90109–06183	19 – 9
90109–06259	16 – 2
90109–06577	30 – 10
90109–06887	18 – 8
90109–08015	28 – 2
90110–05806	23 – 16
90110–06215	23 – 12
90110–06287	23 – 10
90110–08814	31 – 18
	31 – 38
90110–10012	31 – 16
	31 – 30
90111–05002	34 – 42
90111–05003	19 – 7
	33 – 16
	34 – 33
	34 – 38

PART NO.	REF. NO.
90111–06117	18 – 4
	33 – 4
	34 – 29
90111–06139	20 – 22
90111–06826	9 – 7
90111–08836	34 – 11
90111–08847	26 – 2
90116–08826	27 – 11
90119–06054	43 – 21
90119–06137	32 – 21
90119–06209	8 – 28
90119–06233	18 – 6
90149–06118	42 – 11
90149–06829	4 – 13
90150–05024	34 – 3
90159–06181	19 – 3
	19 – 18
	19 – 23
90163–05803	8 – 18
90170–05302	3 – 10
	3 – 13
90170–10012	2 – 21
90179–04003	40 – 9
90179–05804	34 – 4
90179–10811	17 – 4
90179–10813	20 – 15
90179–12802	13 – 4
90179–14001	13 – 19
90179–25615	21 – 6
90183–05067	34 – 22
	34 – 26
90183–05076	24 – 14
90183–050A7	19 – 6
	33 – 9
	34 – 7
	34 – 23
	34 – 27
90183–05818	19 – 20
	34 – 37
	39 – 11
90183–05M01	9 – 4
90183–06822	8 – 27
90185–06801	18 – 17
90201–047A2	43 – 14
90201–05036	38 – 2
	39 – 13
90201–05725	43 – 30
90201–06072	6 – 11

PART NO.	REF. NO.
90201–06078	18 – 12
90201–08066	32 – 18
90201–08609	1 – 11
90201–08612	9 – 15
90201–10066	31 – 17
	31 – 31
90201–10118	30 – 16
	32 – 24
90201–105E8	12 – 3
90201–12019	13 – 3
	35 – 6
90201–15022	2 – 10
90201–15837	27 – 20
90201–173F4	14 – 17
90201–20814	14 – 16
90201–25290	12 – 7
90202–05180	33 – 17
	34 – 32
	34 – 39
90202–26142	21 – 7
90208–20003	13 – 27
90209–10020	21 – 12
90209–18208	14 – 10
90214–10006	2 – 11
90215–10284	2 – 20
90240–08005	32 – 17
90240–08800	31 – 12
	31 – 26
	31 – 46
90249–02002	31 – 15
	31 – 29
90269–06814	19 – 5
	19 – 19
90280–03017	2 – 3
90282–05031	2 – 19
90338–09802	30 – 13
90338–16008	8 – 25
90340–12813	1 – 2
90340–14824	11 – 5
90340–32823	11 – 7
90387–06023	9 – 6
90387–06048	23 – 28
90387–064W3	6 – 12
90387–06890	23 – 13
90387–068B2	23 – 7
90387–068C2	33 – 6
	34 – 18
	34 – 30

PART NO.	REF. NO.
90387–068C4	34 – 43
90387–068C8	18 – 2
90387–068G0	18 – 16
	20 – 18
90387–068H0	20 – 26
90387–07819	20 – 8
	20 – 25
	20 – 32
90387–08812	31 – 51
90387–10003	31 – 4
90387–10814	20 – 12
90387–15810	2 – 16
90401–10820	30 – 15
	32 – 23
90430–06014	1 – 4
	1 – 8
	1 – 20
90430–10148	43 – 4
90430–10802	43 – 6
90445–08831	19 – 12
90445–08832	19 – 13
90445–10832	23 – 30
90445–12804	6 – 20
90445–16807	31 – 35
90445–21848	31 – 7
90450–27806	6 – 17
	6 – 19
90450–39806	8 – 31
90450–48805	8 – 12
90464–05802	33 – 1
	34 – 9
90464–10801	23 – 24
90464–17003	32 – 25
90464–20815	34 – 8
90464–20822	43 – 23
90464–24802	29 – 19
90464–36800	43 – 18
90464–50800	43 – 17
90467–08003	19 – 14
90467–09006	23 – 25
	23 – 34
90467–100A1	23 – 35
90467–10808	6 – 21
90467–12085	32 – 13
90467–12800	8 – 20
90467–13802	8 – 32
90467–13816	8 – 30
90467–20050	8 – 22

PART NO.	REF. NO.
90467–23802	8 – 26
90480–01558	19 – 4
	34 – 12
	34 – 31
90480–01559	33 – 15
90480–01803	6 – 13
90480–01811	33 – 7
90480–10805	9 – 11
90480–12581	9 – 5
90480–12805	18 – 3
90480–13818	40 – 3
90480–14003	33 – 5
	34 – 24
	34 – 28
90480–14229	39 – 12
90480–14816	38 – 4
90480–15363	6 – 9
90480–15483	23 – 8
90480–18549	23 – 11
90480–18859	18 – 5
90480–25482	18 – 19
90501–06800	15 – 6
90501–12743	31 – 44
90501–18576	7 – 5
90506–20193	31 – 34
90506–28800	31 – 2
90508–183B9	31 – 11
90508–184B0	31 – 25
90508–32837	16 – 5
90520–02810	34 – 5
90520–08801	19 – 25
91312–05008	43 – 11
91312–05010	23 – 17
	23 – 21
91312–06016	35 – 4
91312–06020	4 – 19
	12 – 9
91312–06025	35 – 3
91312–06030	29 – 12
91312–06100	1 – 16
91317–06020	29 – 4
91317–06025	34 – 17
91317–08025	29 – 3
91317–08030	21 – 10
91380–06016	9 – 10
91401–20012	16 – 13
	31 – 13
	31 – 27

PART NO.	REF. NO.
91401–20012	31 – 47
	32 – 19
91810–14809	1 – 14
	1 – 15
	10 – 2
	11 – 3
	11 – 14
92012–06010	31 – 37
92012–06020	31 – 20
	31 – 40
92012–08012	24 – 3
92012–08020	32 – 20
92017–06014	20 – 24
92902–06200	16 – 12
92902–06600	31 – 21
	31 – 41
92907–10600	31 – 5
92990–06200	9 – 9
93101–10805	11 – 19
93102–12809	16 – 8
93102–12877	13 – 25
93102–20806	14 – 20
93103–10804	5 – 2
93106–17802	20 – 16
93106–22808	25 – 3
	27 – 5
93106–26801	27 – 8
93210–09809	4 – 3
93210–14812	11 – 6
93210–15620	32 – 7
93210–19809	5 – 16
	11 – 18
93210–26810	36 – 6
93210–32807	8 – 4
93210–32813	11 – 8
93210–34805	7 – 6
93210–54806	7 – 12
93210–84802	5 – 6
93306–000Y5	5 – 10
93306–001X7	4 – 4
93306–003YN	14 – 18
93306–004XX	14 – 2
93306–054Y5	27 – 7
93306–202YD	2 – 17
93306–202YE	14 – 3
93306–203XS	2 – 18
93306–204Y6	14 – 19
93306–252YH	25 – 4

PART NO.	REF. NO.
93306–252YH	27 – 3
93306–305X7	2 – 2
93306–906Y0	4 – 2
93306–906Y1	4 – 2
93310–325X3	12 – 6
93315–112Y9	13 – 24
93315–417Y4	20 – 11
93317–318Y5	20 – 2
93410–22039	14 – 11
93450–16115	2 – 6
93501–04805	31 – 45
93505–16844	13 – 23
93608–30839	16 – 7
93822–15808	14 – 21
93900–00824	25 – 6
	27 – 14
94109–17803	25 – 5
94113–17806	27 – 13
94568–A8096	4 – 10
94668–B5021	27 – 25
94703–00318	1 – 12
94A40–01132	27 – 24
95022–06010	1 – 3
	1 – 19
	4 – 9
	14 – 23
95022–06012	5 – 12
	7 – 14
	38 – 8
95022–06014	30 – 18
	38 – 10
95022–06016	11 – 11
95022–06020	1 – 7
	6 – 3
	7 – 10
	8 – 5
95022–06025	5 – 11
	5 – 14
95022–06040	10 – 6
	11 – 4
	11 – 15
95022–06045	10 – 4
95022–06050	5 – 15
	11 – 16
95022–06055	10 – 3
95022–06070	10 – 5
95022–06080	7 – 11
95022–06090	11 – 20

PART NO.	REF. NO.
95027–06025	30 – 14
95301–08700	32 – 3
95307–06600	18 – 11
95602–06100	30 – 11
95602–08200	27 – 12
95602–14200	25 – 10
	27 – 19
95607–05100	43 – 29
95612–08640	1 – 5
95617–10100	31 – 6
95702–08500	9 – 13
	27 – 23
95702–12500	35 – 5
95707–06500	24 – 8
95707–12500	20 – 6
95802–06020	43 – 9
95812–06030	8 – 9
95812–08012	31 – 50
95812–08016	9 – 14
95812–08040	9 – 16
95817–08016	17 – 6
95822–06012	43 – 27
95822–06025	6 – 10
95827–06012	20 – 29
95827–06014	20 – 9
	20 – 19
	20 – 31
97002–06016	42 – 2
97012–06014	23 – 27
97022–06020	16 – 15
97607–06214	18 – 10
97702–40012	43 – 13
97702–50016	18 – 15
97707–50012	19 – 26
	33 – 13
	34 – 36
97707–50014	40 – 2
97707–50016	38 – 3
	39 – 10
	39 – 14
98502–05025	7 – 2
98507–05012	24 – 13
	29 – 16
98507–05020	24 – 12
98512–06012	14 – 5
98707–03020	41 – 11
98707–04045	32 – 12
98907–04020	40 – 8

PART NO.	REF. NO.	PART NO.	REF. NO.	PART NO.	REF. NO.	PART NO.	REF. NO.	PART NO.	REF. NO.	PART NO.	REF. NO.
99001–10600	16 – 6										
99009–10400	12 – 4										
99009–20500	13 – 26										